OCTOBER 1975

HEWLETT-PACKARD JOURNAL

© Copr. 1949-1998 Hewlett-Packard Co.

Digital Power Meter Offers Improved Accuracy, Hands-Off Operation, Systems Compatibility

This four-digit general-purpose microwave power meter features autoranging, absolute or relative readings, 0.01 dB resolution, and 0.02 dB basic accuracy. Six power sensors cover a frequency range of 100 kHz to 18 GHz and a power range of −70 dBm to +35 dBm.

by Allen P. Edwards

BETTER DISPLAY RESOLUTION AND readability and potentially easier interfacing with other equipment for systems operation are the most immediate and obvious advantages of digital instruments over their analog counterparts. Model 436A, a precision general-purpose digital power meter, brings these benefits and many others to the measurement of RF and microwave power in a frequency range of 100 kHz to 18 GHz and a power range of −70 dBm to +35 dBm, depending on the power sensor being used. Automatic and remotely programmable, the new meter is an excellent instrument for general laboratory use, especially in the new calculator-controlled mini-systems based on the Hewlett-Packard Interface Bus (HP-IB). It is also well suited for production testing, calibration, quality assurance, and field and depot maintenance of radar and transceiver systems.

Designed to be easy to use and interpret, Model 436A has a logically organized, uncluttered front panel, a large four-digit light-emitting-diode display, and an auxiliary analog meter for peaking adjustments (Fig. 1). Power readings can be displayed in absolute units of watts or dBm, or in dB relative to a previous input power level. This relative measurement capability is useful for measuring parameters such as flatness and insertion loss, where absolute power levels are of no significance. Basic instrument accuracy, including sensor nonlinearity, is essentially the same regardless of measurement units: ±0.5% or ±0.02 dB.

Model 436A measures power in five ranges, automatically switching between ranges for hands-off operation. Autoranging can be disabled by means of a front-panel pushbutton.

The new meter accepts the 8481A, 8482A, and 8483A thermocouple power sensors,[1,2] the high-power 8481H and 8482H, and the new Model 8484A high-sensitivity low-barrier Schottky-diode power sensor (see article, page 8). The low SWR of these sensors—specified maximum SWR's are 1.1 to 1.3, depending on frequency—substantially reduces mismatch uncertainty, the major source of error in microwave power measurements. For example, with a sensor SWR of 1.1 and a source SWR of 1.3, mismatch uncertainty is a low ±1.5%. The power meter automatically recognizes which sensor is connected to it and

Cover: *A mini-system that shows off the features and capabilities of the new Model 436A Digital Power Meter and the new Model 8484A Power Sensor (foreground). A Hewlett-Packard Interface Bus option puts the 436A under calculator control. The sensor allows accurate power measurements down to −70 dBm.*

In this Issue:

Digital Power Meter Offers Improved Accuracy, Hands-Off Operation, Systems Compatibility, by Allen P. Edwards ..... **page 2**

Very-Low-Level Microwave Power Measurements, by Ronald E. Pratt .. **page 8**

Active Probes Improve Precision of Time Interval Measurements, by Robert W. Offermann, Steven E. Schultz, and Charles R. Trimble .... **page 11**

Flow Control in High-Pressure Liquid Chromatography, by Helge Schrenker **page 17**

© Hewlett-Packard Company, 1975

© Copr. 1949-1998 Hewlett-Packard Co.

Fig. 1. *Model 436A Digital Power Meter with Model 8481A Power Sensor measures power from 3μW to 200 mW at frequencies from 10 MHz to 18 GHz. Five other sensors extend the frequency and power ranges.*

adjusts the displayed units and decimal point accordingly.

An internal power calibrator provides an accurate 50-MHz, 1-mW signal for matching the meter to any individual sensor. A manual front-panel CAL FACTOR switch adjusts the meter for different sensor efficiency values (supplied with each sensor). A SENSOR ZERO button automatically zeros the meter and display.

Two remote-programming options are available, a binary-coded-decimal (BCD) arrangement and a more versatile HP-IB system. In the HP-IB system the power meter is both a listener and a talker, receiving commands and transmitting power readings over the bus. Both programming options are field-installable and the meter is easily converted from one to the other.

How It Works

The design of the 436A Power Meter is built on the excellent base of the 435A Power Meter.[2] The analog circuits of the two meters are very similar.

Fig. 2 is the block diagram of the 436A. The small dc voltage developed in the sensor is chopped into a 220-Hz square wave. This signal is then amplified and detected in synchronism with the chopping action so that only 220-Hz signals of the proper phase contribute to the output.

In the 436A the synchronous detector was redesigned so that it rectifies the signal but does not filter it as the 435A detector did. This was done so the detector would not limit the response time of the instrument on the higher ranges. This change makes the 436A about four times faster than the 435A, a difference that becomes important when the meter is used in an automatic system.

Other minor changes were made to get somewhat better accuracy and temperature stability consistent with tighter specifications.

Logarithmic Analog-to-Digital Converter

The heart of this instrument is the logarithmic analog-to-digital converter (Fig. 3). This circuit, based on the standard dual slope conversion circuit, allows readings in watts or dBm with the same accuracy and with a minimum of extra circuitry. Unlike analog approaches to the problem of log conversion, no warm-up time is required and there is very little temperature drift ($<\pm.001$ dB/°C).

At the start of a measurement cycle switch S_1 closes and connects the unknown to the integrator IC1. After a fixed period of time T_1 switch S_1 opens. This has left a voltage V_1 on the integrator proportional to the unknown input voltage, which is proportional to input power. In the watts mode the appropriate reference voltage is then connected to the integrator using S_2 or S_3 until the comparator, IC2, detects a zero crossing. The discharge time, T_2, is proportional to the unknown input and can be counted to get a digital result representing watts of input power. During T_3 switches S_6 and S_7 are closed and a feedback loop is formed that puts a charge on C_2 to remove the offset

© Copr. 1949-1998 Hewlett-Packard Co.

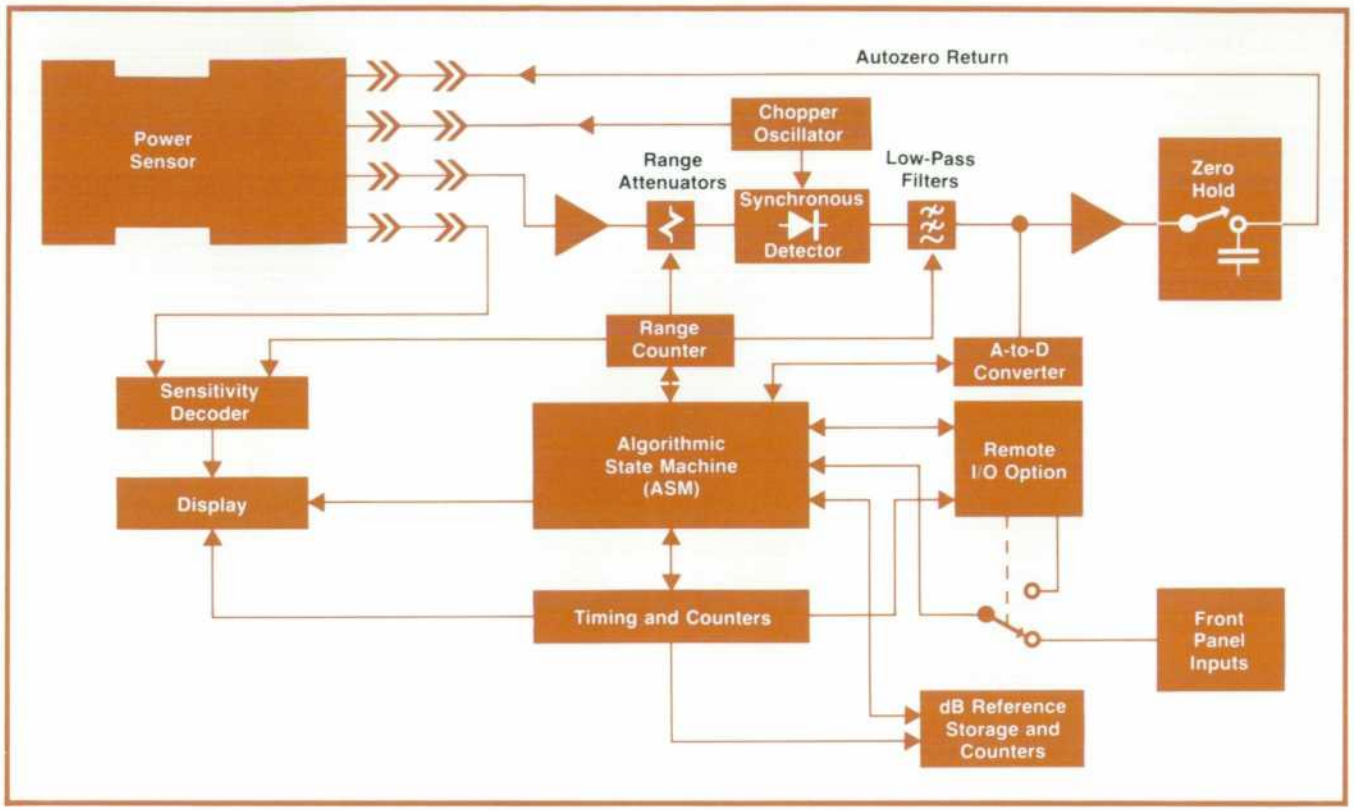

Fig. 2. *Block diagram of 436A Power Meter. Algorithmic state machine (ASM) automates meter operation, making it very easy to use.*

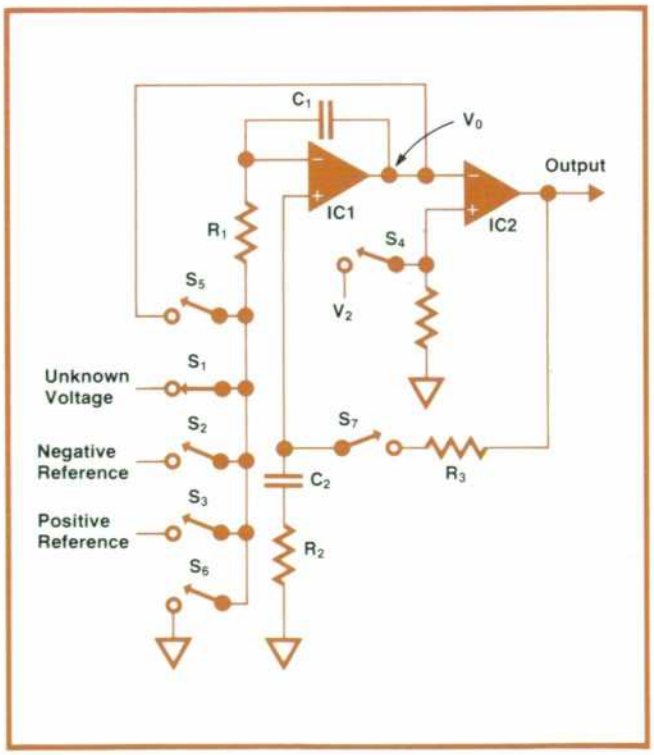

Fig. 3. *Logarithmic analog-to-digital converter uses the dual-slope conversion technique, gives readings in watts or dBm. The circuit requires no warmup and has little temperature drift.*

from IC1. R_3 and C_2 provide the dominant pole in the loop and R_2 and C_2 compensate for a pole in IC2.

If a log conversion is required, switches S_4 and S_5 are closed at the beginning of T_2. This connects the output of the integrator back to the input. Thus the integrator output voltage is

$$V_0 = \frac{1}{R_1C_1}\int V_0 dt.$$

Solving this equation gives

$$T_2 = \log \frac{V_1}{V_2}.$$

V_1 is the initial condition of the integrator; it is proportional to the input voltage V_{in}, which is proportional to input power P.

$$V_1 = \frac{T_1 V_{in}}{R_1C_1}.$$

V_2 is a reference proportional to 0 dBm, or 1 mW. Then

$$T_2 = 10 \log \frac{P}{1\ \text{mW}}.$$

Ranging is accomplished by presetting the bottom-of-range dBm value into the counter at the beginning of T_2 and counting from there.

© Copr. 1949-1998 Hewlett-Packard Co.

Automatic Gain and Attenuation Measurements

The programmable features and low mismatch of the 436A Power Meter and its associated sensors allows gain and loss measurements to be made at hundreds of frequencies in less than one minute with accuracies approaching ±0.6 dB. By using a second 436A Power Meter and a 11667A Power Splitter, the effects of source SWR can be dramatically reduced, improving typical accuracies to better than ±0.2 dB*.

Shown in the diagram is a system for making highly accurate measurements of attenuation. The system is capable of measuring up to 50 dB of attenuation, but is best suited for measurements of 30 dB or less.

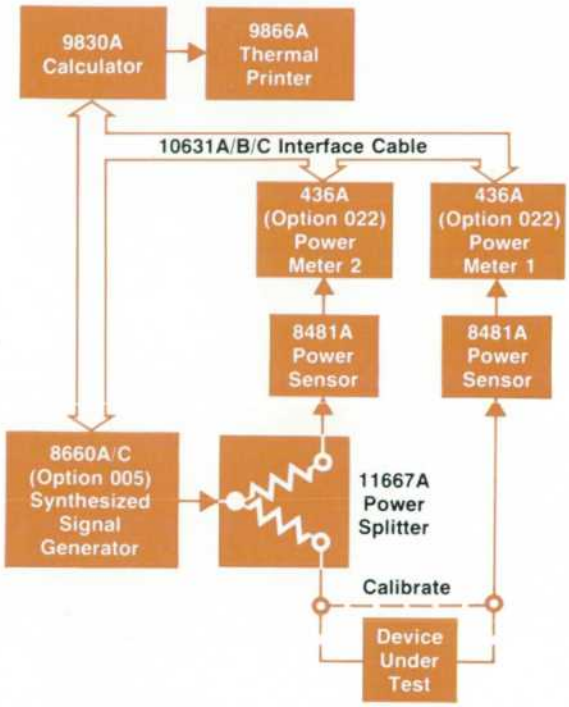

This is a very accurate measurement technique because almost all major errors, except mismatch, can be calibrated out. Typical mismatch uncertainties are between ±0.1 and ±0.2 dB. Instrumentation will typically add ±0.02 dB to the total error. On the top range only, sensor nonlinearity adds ±0.06 dB.

Although this technique is best suited for attenuation measurements of 30 dB or less, measurements of attenuation levels from 30 to 70 dB can be made using the 8484A High Sensitivity Power Sensor. The set-up is the same, except that the 8484A Power Sensor is connected to power meter 1 in the diagram.

For continuous measurements of attenuation from 0 to 70 dB (for example, for sweep testing filters), the test channel may be modified so that it contains a switch and two power meters, one with an 8481A Sensor and one with an 8484A Sensor. During the measurement phase of the cycle, the 8484A Sensor is switched into the circuit when the power falls below about −25 dBm and the 8481A Sensor is switched into the circuit when the power goes above approximately −21 dBm.

HP Application Note 196 gives details of measurement procedures and 9830A Calculator programs, and presents several other mini-system applications of the 436A.

*For a discussion on the use of a power splitter to reduce source SWR, see Hewlett-Packard Application Note 183, "High Frequency Swept Measurements," Appendix A.

Algorithmic State Machine

The decision to use a specially designed analog-to-digital converter instead of a panel meter led us to choose a ROM-programmed algorithmic state machine as a controller for the instrument. The benefit is that such a machine can do much more than sequence the A-to-D converter, with little additional hardware or cost. The approach is also sufficiently flexible that several fine points are included that would normally be left out for economy in a discrete logic design. For example, there is an under-range light to tell the user when the meter is not on the optimum range (if range hold is in use). In watts mode the under-range point is 10% of full scale. If the machine is on the bottom range, even when the reading is less than 10% of full scale there is no better range and the light does not go on. If the instrument is in dBm mode the light goes on if the reading is less than 10 dB below full scale. All of this decoding is in firmware (ROM) and the only hardware associated with the light is a latch-driver. This coding arrangement may not seem important, but it is an example of making use of firmware to improve the usability of the instrument by minimizing confusion. Some of these changes were made in the course of development with only programming changes, further evidence that instrument behavior is a matter of choice with state machine design and no longer an engineering trade-off.

As an example of one firmware routine in the state machine program, consider the control routine for the relative-dB circuit (Fig. 4). This circuit takes the ratio of two power levels by storing the reference power in dBm and subtracting it from the measured power, also in dBm. The subtraction is done in two tracking counters. The timing counter contains a count equal to the dBm input power P. This counter is counted down until the synchronous counter that contained the reference quantity R reaches zero. At this point the timing counter contains

$$10\log P - 10\log R = 10\log P/R.$$

A study of the flow graph shows how the state machine exercises a relatively small amount of hardware to do this job. Note that because counting stops when the relative counter underflows (= −1) this gives one too many counts. To compensate, an extra count is initially clocked into this counter so the underflow represents zero.

Sensitivity Coder

The sensitivity coder, Fig. 5, is responsible for the instrument's ability to know which sensor is connected to it and to scale all readings appropriately. This circuit makes use of a simple A-to-D converter and a 4K ROM. The A-to-D converter reads the value of a coding resistor in the sensor. The circuit uses three comparators to generate eight codes; thus it

© Copr. 1949-1998 Hewlett-Packard Co.

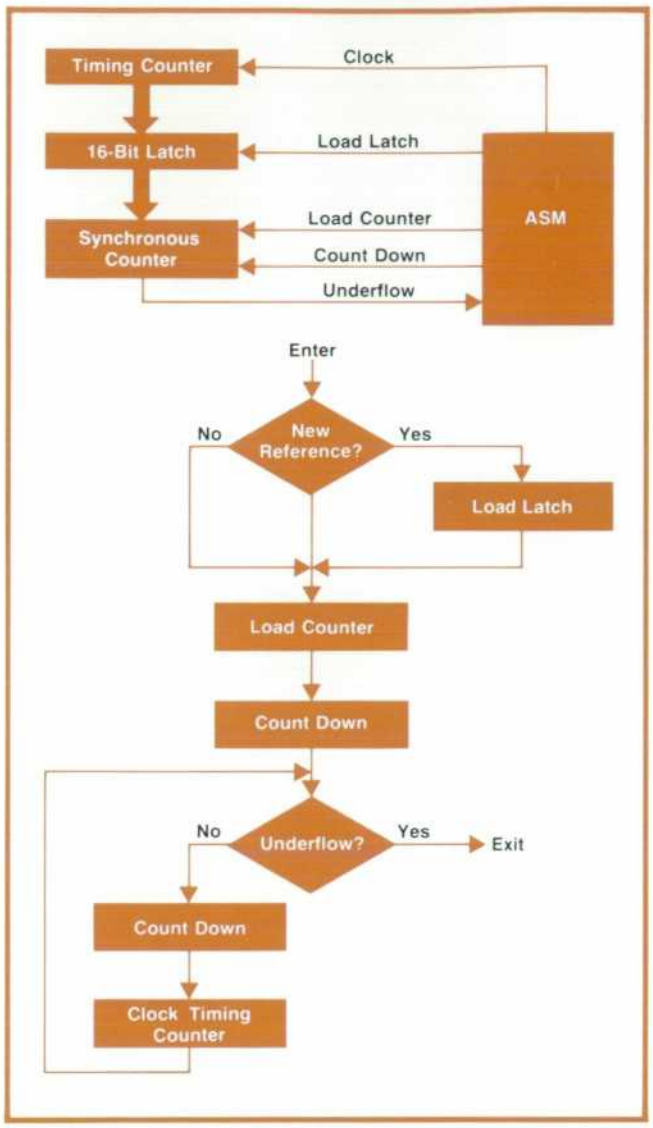

Fig. 4. *Relative-dB circuit and simplified flow chart of the state machine firmware routine that controls it.*

can recognize eight different sensors. The resistor values are arranged in a binary code; half the values produce a voltage above the first comparator's reference voltage V_{R1} and half below. O_1 is then the most significant bit. The second comparator output, O_2, switches if the sensor resistor is larger than one quarter of the resistor values unless O_1 is high. In this case the higher O_1 causes current through R_2 which raises the comparison voltage to correspond to a resistor value larger than three quarters of the resistor values. Thus O_2 is the next most significant bit. Similarly O_3 can have four different comparison voltages depending on O_1 and O_2. O_3 is the least significant bit.

These three bits plus the range information go into a 4K-bit ROM where they determine the total sensitivity of the instrument on that range. This information drives the decimal points and unit multipliers on the front panel. When the dBm mode is chosen, the dB/watt line causes the center decimal point to light and all the watts lights to go out. In the dB modes the range information goes to the counter and is used as a preset number. Five other lines come out of this ROM. These go to the input/output interface and represent the exponent multiplier for the output data. This number is between 12 and 1 for watts (1000×10^{-1} to 1000×10^{-12} watts) and is equal to 2 for dB (1000×10^{-2} dBm).

Design for Extreme Environments

The 436A Power Meter is designed to work in 95% relative humidity and under severe conditions of condensation. In tests at Hewlett-Packard's environmental test laboratory the meter was put to a test similar to coming from freezing weather into a warm room. In spite of extreme condensation, the instrument was operational very quickly. One reason the instrument behaves so well is the use of guard rings around the sensitive circuit nodes.

When it gets wet, the surface of a printed circuit board becomes slightly conductive. This can become a problem when high impedances are involved. For example, in Fig. 6, any leakage current into pin 3 of the amplifier will cause an error. A typical impedance between pins 3 and 4 with a wet board might be $10^9\ \Omega$,

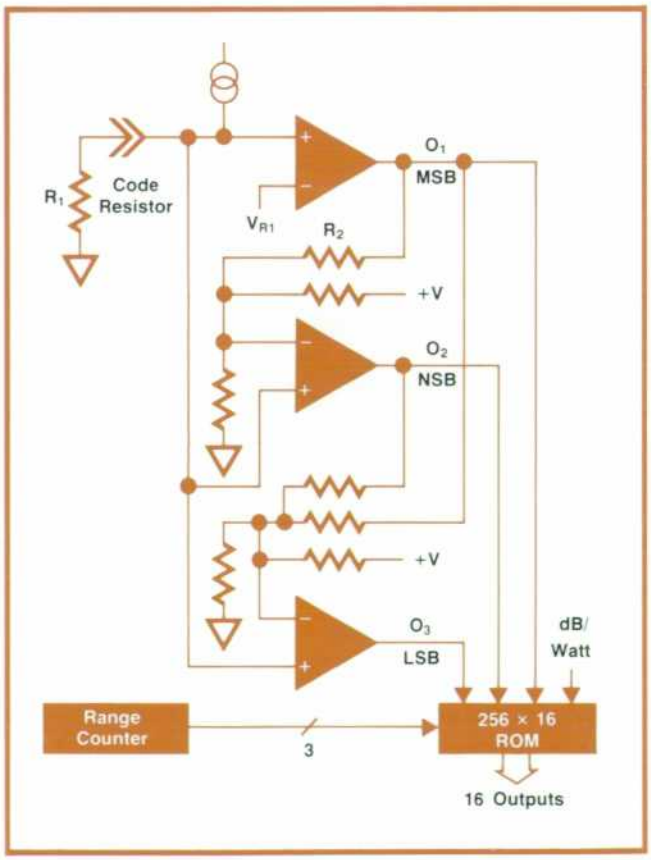

Fig. 5. *Sensitivity coder detects which power sensor is connected to the meter and automatically scales readings. Coder reads the value of a resistor in the sensor.*

© Copr. 1949-1998 Hewlett-Packard Co.

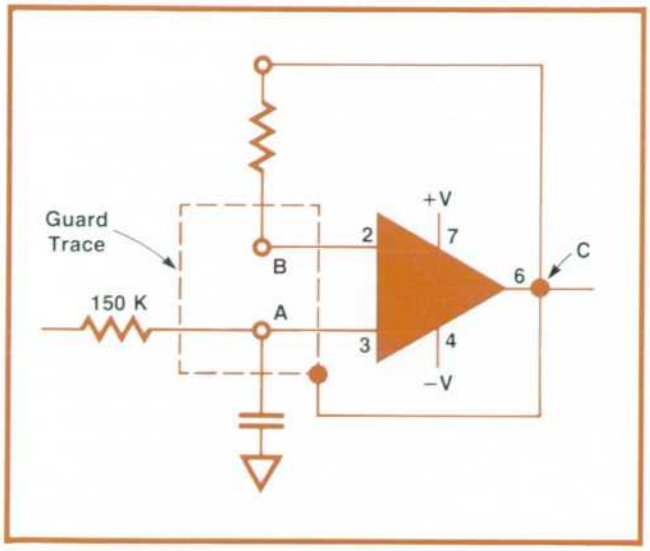

Fig. 6. *Guarded amplifier inputs reduce leakage problems with wet printed circuit boards, making it possible for the 436A to work in 95% relative humidity and under severe conditions of condensation.*

allowing enough current to flow into pin 3 to cause an error voltage of 2.25 mV, which would make the instrument go out of specification.

With the help of computer printed circuit layout, guard traces have been placed around amplifier input terminals in the 436A (A and B in Fig. 6). These traces are connected to a low-impedance node (C in Fig. 6), so any current flowing toward the input terminals will flow into the guard ring and be grounded through the low-impedance node without developing an error voltage.

Acknowledgments

I would like to thank Bob Waldron for the excellent mechanical design evident in the simplicity of the final product, Cory Boyan for his design of the BCD interface, and Roger Graeber for his attention to details that made for such a smooth introduction of this product.

Allen P. Edwards

Allen Edwards was project leader for the 436A Power Meter. He received his BS and MS degrees in electrical engineering from Stanford University in 1971 and joined HP the same year. He has contributed to the design of the 8558B Spectrum Analyzer and the 435A Power Meter and holds a patent on the logarithmic converter in the 436A. Allen was born and raised in Los Angeles. He's married and now lives in Palo Alto, California. A cycling enthusiast, last year he bicycled from Palo Alto to Los Angeles, a 450-mile, six-day trip. He also dabbles in photography and enjoys backpacking. He's a member of IEEE.

References

1. W.H. Jackson, "A Thin-Film/Semiconductor Thermocouple for Microwave Power Measurements," Hewlett-Packard Journal, September 1974.
2. J.C. Lamy, "Microelectronics Enhances Thermocouple Power Measurements," Hewlett-Packard Journal, September 1974.

SPECIFICATIONS
HP Model 436A Digital Power Meter

FREQUENCY RANGE: 100 kHz to 18 GHz (depending on power sensor used).

POWER RANGE:

WITH 8481A, 8482A, OR 8483A SENSORS: 50 dB with 5 full scale ranges of 10 and 100 μW; 1, 10 and 100 mW. The display is also calibrated in dBm and dB from −20 dBm to +20 dBm full scale in 10-dB steps.

WITH 8481A-H01 OR 8482A-H01 SENSORS: 45 dB with 5 full-scale ranges of 1, 10 and 100 mW; 1 and 3 watts. The display is also calibrated in dBm and dB from 0 dBm to +30 dBm full scale in 10-dB steps, and a 5-dB step from +30 dBm to +35 dBm.

INSTRUMENTATION ACCURACY[1]:

WATT MODE: ±0.5% in ranges 1 through 4; ±1.0% in range 5.

DBM MODE: ±0.02 dB ±0.001 dB/°C in range 1 through 4; ±0.04 dB ±0.001 dB/°C in range 5.

DB(REL) MODE[2]: ±0.02 dB ±0.001 dB/°C in ranges 1 through 4; ±0.04 dB ±0.001 dB/°C in range 5.

ZERO: automatic, operated by a front-panel switch

ZERO SET: ±0.5% of full scale on most sensitive range, typical. ±1 count on other ranges.

ZERO CARRY OVER: ±0.2% of full scale when zeroed on the most sensitive range

NOISE: With 8481A, 8482A and 8483A sensors; ±0.5% of full scale peak-to-peak on the most sensitive range typical. Less in higher ranges.

LONG TERM ZERO DRIFT (8 hrs): ±2% of full scale on most sensitive range (typical at constant temperature).

RESPONSE TIME: (0 to 99% of reading) with 8481A, 8482A, 8483A sensors;

RANGE 1 <10 seconds (most sensitive range)

RANGE 2 <1 second

RANGE 3 through 5 <100 msec

(Typical, measured at recorder output).

REFERENCE OSCILLATOR: Internal 50 MHz oscillator with Type N female connector on front panel or rear panel (Option 003 only). Power output 1.0 mW. Factory set to ±0.7% traceable to the National Bureau of Standards. Accuracy: ±1.2% worst case (±0.9% rms) for one year (0°C to 55°C).

CAL FACTOR: 16-position switch normalizes meter reading to account for calibration factor. Range 85% to 100% in 1% steps.

CAL ADJUSTMENT: Front-panel adjustment provides capability to adjust gain in meter to match power sensor in use.

RECORDER OUTPUT: Proportional to indicated power with 1 volt corresponding to full scale and 0.316 volts to −5 dB; 1 kΩ output impedance, BNC connector.

RF BLANKING: Open collector TTL; low corresponds to blanking.

DISPLAY: Digital display with four digits. 20% overrange capability on all ranges. Analog Meter: uncalibrated peaking meter to see fast changes.

POWER: 100, 120, 220, or 240 V +5%, −10%, 48 to 440 Hz, less than 20 watts (less than 23 with digital input/output).

WEIGHT: Net, 4.5 kg (10 lb).

PRICES IN U.S.A.: 436A Power Meter, $1800.

3m (10 ft) cable for power sensor, $10

6.1 m (20 ft) cable for power sensor, $55

15.2 m (50 ft) cable for power sensor, $105

30.5 m (100 ft) cable for power sensor, $155

61 m (200 ft) cable for power sensor, $260

Digital input/output, fully compatible with HP Interface Bus (HP-IB), $375

Digital input/output fully compatible with BCD Interface, $275

MANUFACTURING DIVISION: STANFORD PARK DIVISION
1501 Page Mill Road
Palo Alto, California 94304 U.S.A.

[1]Includes any sensor nonlinearity.

[2]Specifications are for within range measurements. For range-to-range accuracy add the range uncertainties.

© Copr. 1949-1998 Hewlett-Packard Co.

Very-Low-Level Microwave Power Measurements

A new low-barrier Schottky diode power sensor makes it possible to measure power as low as 100 picowatts over a frequency range of 10 MHz to 18 GHz.

by Ronald E. Pratt

A NEW POWER SENSOR, MODEL 8484A, has been developed for measuring microwave power levels down to 100 picowatts over a frequency range of 10 MHz to 18 GHz. It is compatible with any 435A or 436A Power Meter, and its power range is −20 to −70 dBm, a range that begins where most other sensors become noisy or subject to thermal drift. Higher power levels up to +35 dBm can be measured with other sensors,[1] so with one meter and three sensors, a 105-dB measurement range is possible.

Like its predecessors, the 8484A (Fig. 1) has a low SWR specification:

1.15	30 MHz to 4 GHz
1.2	4 GHz to 10 GHz
1.3	10 GHz to 18 GHz.

Low sensor SWR minimizes measurement error caused by multiple mismatch interaction between the sensor and the source being measured. Typically, this interaction is the major source of error in a power measurement.

The power sensing element in the 8484A is a diode detector. For peak power levels up to −20 dBm, the diode is a square law device so it yields a true indication of power, independent of the waveform of the signal being measured. As the peak power is increased above −20 dBm, the diode response changes from square law to linear, so it becomes sensitive to signal waveform. With a peak power of +10 dBm, as much as 2 dB of error has been observed when measuring signals with amplitude modulation or high harmonic content. For this reason, the maximum power specification of the 8484A is −20 dBm, a level below which waveform-related errors are negligible.

Burnout of the power sensor is always a user concern. The 8484A detector diode can withstand 200 milliwatts (+23 dBm), so the user has a safety margin of 2×10^4 in power.

The diode detector in the 8484A is a newly developed low-barrier Schottky diode. A thin-film matching circuit provides a 50-ohm termination. The diode and matching circuit are described elsewhere in the literature.[2] The RF voltage across the 50-ohm load is rectified by the diode, following the square law, and the resulting dc voltage is measured and displayed by the power meter. This rectification is about 5×10^3 more efficient than the RF-to-dc conversion of the higher-power thermocouple sensors. The small signal gain of the amplifier built into the sensor is doubled to adjust the scale factor so that decade power ranges are maintained.

The power meters were designed with a shaping network to compensate for the high-power nonlinearity inherent in a thermocouple. Another shaping network in the 8484A makes the amplifier output match this nonlinearity. In this way, the accuracy specification of the meter-sensor combination is not degraded.

The output voltage of the detector is about 50 nano-

Fig. 1. *Model 8484A Power Sensor works with HP 435A and 436A Power Meters to measure power from −70 to −20 dBm over a frequency range of 10 MHz to 18 GHz. Calibration factor is shown on housing as a function of frequency.*

© Copr. 1949-1998 Hewlett-Packard Co.

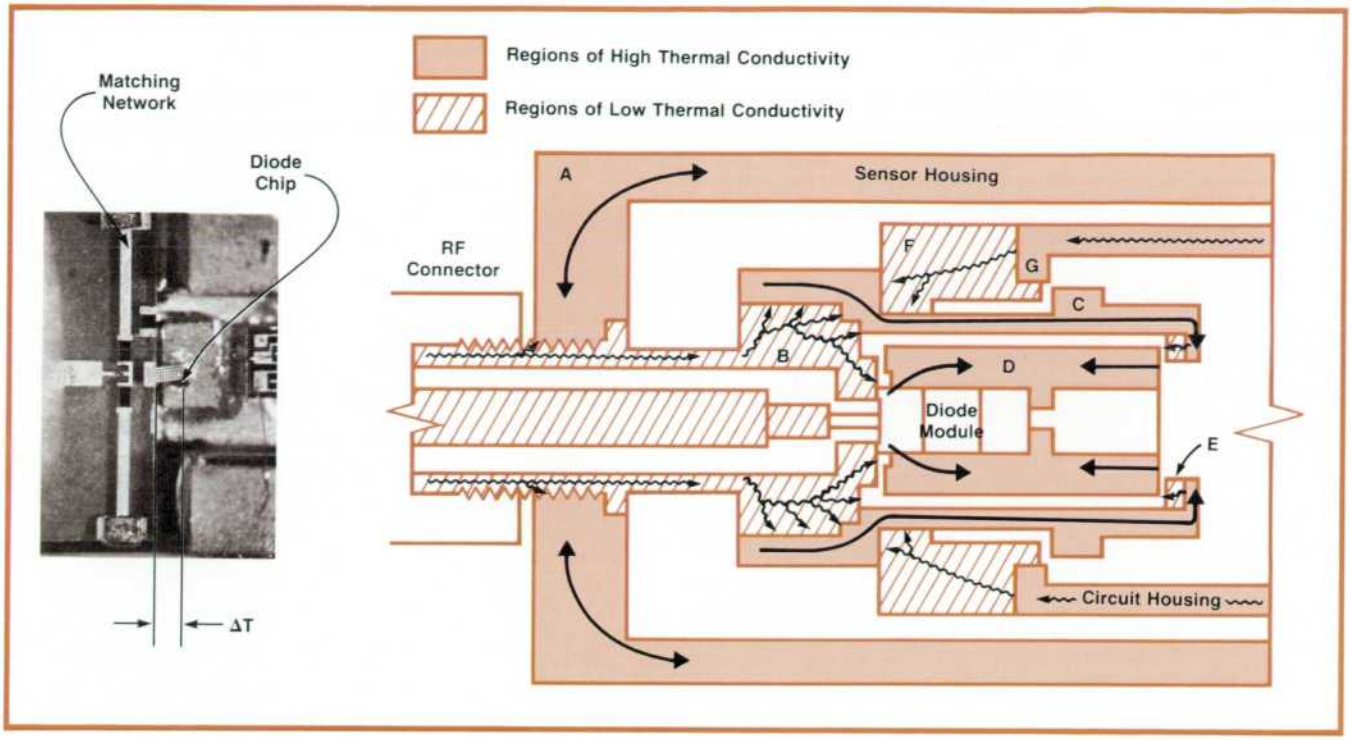

Fig. 2. *Sensor housing is designed for low thermal drift. In the drawing the housing A acts as a sink for heat from the RF connector or as a source for heat caused by handling. Low-conductivity region B delivers heat to one end of the diode module, and to high-conductivity region C, which transfers it to the opposite end of the module. High-conductivity region D distributes the heat from B and C uniformly. Region E balances the heat transfer from C to D with that from B to D. Region F blocks heat transfer from circuit housing G. The photo is an interior view of the diode module showing the diode chip, the matching network, and the region where a temperature gradient ΔT will generate a thermal EMF.*

volts dc with an applied power of −70 dBm. Circuit layout had to be handled very carefully to prevent leakage signals or extraneous thermoelectric voltages from swamping out the desired signal. The FET chopper used in the thermocouple sensors was redesigned for the diode sensor to allow separation of autozero and signal paths, and a marked improvement in thermal stability was obtained by using an integrated circuit approach.

Thermal drift is always encountered in the measurement of low power levels. For the 8484A, drift becomes noticeable below 1 nanowatt. The major drift mechanism is a thermal EMF generated by a temperature gradient that appears across the diode. The mechanical design of the 8484A minimizes this gradient by insulating the diode package and arranging the thermal paths so the primary heat source is at the RF input connector. Any heat that does enter the diode area is directed uniformly to both ends of the diode package. With both ends changing temperature uniformly, the temperature gradient across the diode remains almost constant, thus minimizing drift. Thermal drift is further reduced by the heat sinking action of an aluminum extrusion which forms the outer housing of the 8484A. Details of the thermal design are shown in Fig. 2. Fig. 3 compares the drift of an 8484A with that of a typical thermistor sensor. The heat source was a warm hand and both sensors were in their most sensitive ranges. Note that there is a

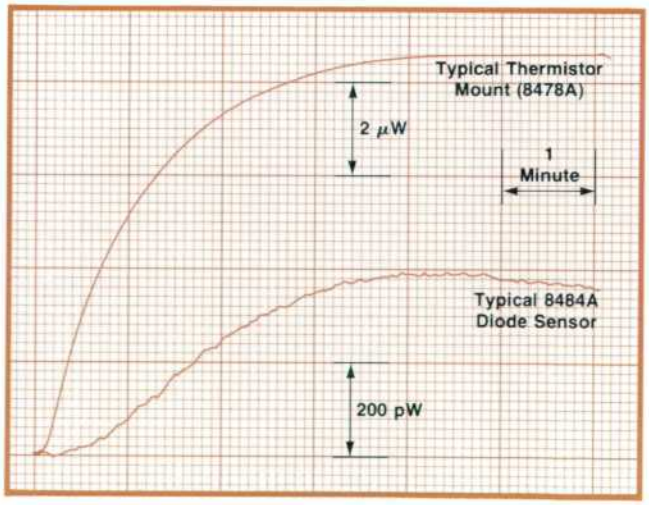

Fig. 3. *Drift of a typical 8484A High-Sensitivity Power Sensor in response to a hand grasp, compared with that of a typical thermistor power sensor. Both sensors were on their most sensitive ranges, which differ by 10^4 in sensitivity.*

© Copr. 1949-1998 Hewlett-Packard Co.

factor of 10^4 difference in scale factor. Higher power ranges are of course almost drift free.

Each 8484A is supplied with an individual calibration factor curve as well as a more precise tabular data sheet. This calibration information is measured using a modified 8542B Automatic Network Analyzer. Unlike bolometric or thermoelectric power sensors, the efficiency of the diode detector is not always a maximum at the low RF frequencies. Since efficiency η and calibration factor are related by:

$$\text{C.F.} = \eta\,(1-\rho^2)$$

where ρ is the magnitude of the sensor's reflection coefficient, the calibration factor could exceed 100% if it were always referenced to 100% at 50 MHz. The program used to calibrate the 8484A normalizes the calibration factor to the frequency where the diode is most sensitive. When the calibration factor label is printed, the computer writes the correct 50-MHz calibration factor on the label. The normalization is performed such that an integer always results (the CAL FACTOR switch on the power meter has integer steps).

The CAL FACTOR switch must be placed on the appropriate setting when the CAL ADJUST control is being set. A special reference attenuator, the 11708A, reduces the meter's reference oscillator power to one microwatt to allow calibration of the 8484A. This attenuator is accurate and well matched, so a maximum of 1% error is added to the calibration step.

The sensitivity of the diode detector in the 8484A is influenced by ambient temperature. This change has been compensated for, but at extreme ambient temperatures, the instrument should be recalibrated using the reference oscillator and the 11708A to obtain the most accurate results. Typical temperature-sensitivity variations for uncompensated and compensated detectors are shown in Fig. 4.

The 8484A is fully compatible with all 435A and 436A power meters. The 436A offers digital display and many other user conveniences. On its most sensitive range, the 8484A is noisier than the other sensors, so the more effective filtering found in the 436A is an advantage when measuring 100 picowatts to 1 nanowatt.

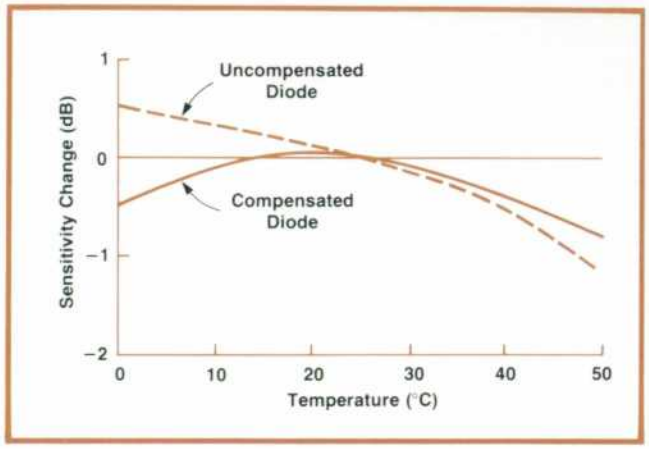

Fig. 4. *Typical sensitivity variations with ambient temperature for compensated (8484A) and uncompensated diode sensors. Recalibration is recommended at extreme temperatures for most accurate results.*

Acknowledgments

Many people contributed to the 8484A project. Special thanks go to Brent Palmer for guidance in the early phases of the project, Pete Szente for supplying an excellent detector design, and Les Brubaker for picking up the difficult final design of the amplifier shaper circuit. Bob Kirkpatrick was responsible for the 11708A. Industrial design was by Yas Matsui.

References

1. J.C. Lamy, "Microelectronics Enhances Thermocouple Power Measurements," Hewlett-Packard Journal, September 1974.
2. P.A. Szente, S. Adam, and R.B. Riley, "Low-Barrier Schottky Diode Detectors," to be published.

Ronald E. Pratt

Ron Pratt has been designing microwave components for sweepers, network analyzers, and power meters since he came to HP in 1967; his latest is the 8484A Power Sensor. A 1967 BSEE graduate of Newark College of Engineering, he's a member of IEEE and has taught microwave electronics at Foothill College for six years. Ron was born in Buffalo, New York and now lives in San Jose, California. He's married, has two small daughters, and enjoys cabinet making and tinkering with cars.

SPECIFICATIONS
HP Model 8484A Power Sensor

FREQUENCY RANGE: 10 MHz-18 GHz
POWER RANGE: 100 pW-10 μW
SWR (REFLECTION COEFFICIENT): <1.40 (0.167) 10-30 MHz; <1.15 (0.070) 30 MHz-4 GHz; <1.20 (0.091) 4-10 GHz; <1.30 (0.130) 10-18 GHz
MAX. AVERAGE POWER: 200 mW
MAX. PEAK POWER: 200 mW
NOMINAL IMPEDANCE: 50Ω
RF CONNECTOR: Type N Male
PRICE IN U.S.A.: $550
OPTION 002 Range knob w/new scale markings for 435A Ser. No. 1530A and below: $25
OPTION 003 Delete 11708A 30-dB calibration pad (11708A is factory set to ±0.05dB at 50 MHz, traceable to NBS, SWR <1.05): less $50
MANUFACTURING DIVISION: STANFORD PARK DIVISION
1501 Page Mill Road
Palo Alto, California 94304

© Copr. 1949-1998 Hewlett-Packard Co.

Active Probes Improve Precision of Time Interval Measurements

Usable with most time interval counters, this new probe system helps solve problems caused by trigger point indeterminacy, system delay errors, inadequate dynamic range, and circuit loading.

by Robert W. Offermann, Steven E. Schultz, and Charles R. Trimble

IN ELECTRONICS, A TIME INTERVAL is the difference between the times of occurrence of two electronic events, usually points on a voltage waveform. Time interval measurement is normally done with oscilloscopes or with electronic counters that have time interval measuring ability. However, even the best oscilloscopes and counters have certain limitations in time interval measurements.[1]

It is these shortcomings that the new Model 5363A Time Interval Probes (Fig. 1) are designed to overcome. The probes optimize input signals for a counter's front end. Their contribution is best understood by considering the problems they are designed to solve.

Oscilloscopes

Oscilloscopes display a waveform in its entirety, allowing the user to see an amplitude-versus-time plot of the signal. To use an oscilloscope to measure time interval, the user must locate the desired start and stop points on the displayed waveform and then read the time interval from the time axis. The main problem with most oscilloscopes is that neither the voltage axis nor the time axis is precise. In high-frequency time interval measurements using sampling scopes or active-probe real-time scopes, dynamic range limitations may cause even greater errors because imprecise voltage dividers are often needed. The latest oscilloscopes, such as the HP Model 1722A with its built-in digital processor,[2] overcome these limitations to a great extent, achieving accuracies as great as 0.6% for longer time intervals. However, time base calibration is required every

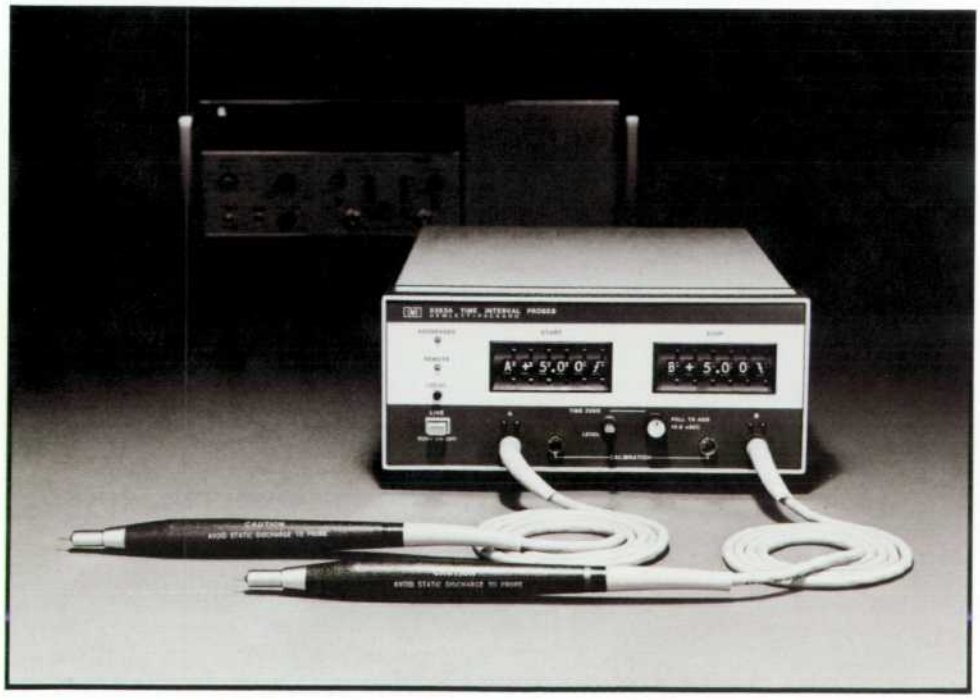

Fig. 1. *Model 5363A Time Interval Probes consist of two low-capacitance (10 pF) active probes and associated electronics in a separate box. Either probe can be used alone to make start/stop measurements or both probes can be used, one for start and one for stop. Trigger levels are adjustable from −9.99 V to +9.99 V. An adjustable delay equalizes propagation time differences in start and stop channels.*

© Copr. 1949-1998 Hewlett-Packard Co.

few hours to maintain accuracy, and time intervals must be repetitive to allow the operator to set up the measurement. The latter requirement makes it difficult to measure single-shot intervals and jitter. Also, because a human operator must set and read the time interval from a CRT screen, or in the case of the newer scopes from a processor display, oscilloscopes in general are not suitable for systems applications in which digital programming and digital output are desired.

Counters

Digital counters that have time interval capability are potentially more accurate than oscilloscopes in the time domain because they provide a precise time base for measurements of time interval. The biggest problem that counters have in time interval measurement is that their input circuits are optimized for frequency counting, that is, for detecting zero crossings. Because of this, setting the trigger levels that define the limits of time intervals is difficult. The trigger level setting usually has a limited range, typically ±1 volt or less, and its position can only be known accurately by using a digital voltmeter built into the counter or connected externally. At best, however, this trigger level setting is the center of the hysteresis band of the counter input (Fig. 2); at worst, it is offset from this center in an unspecified manner by several tens of millivolts. Therefore, the actual triggering point of the input amplifier will be offset from the selected or measured level by an unknown amount. Furthermore, this offset may be different depending upon which slope the counter is triggering on, and it can also change with the input frequency and signal level. The result is that one seldom knows the actual trigger point of a counter to better than 50 mV, and the ambiguity is often much greater. Because of the limited dynamic range of counters, dividers must be used to measure larger signals. This only increases the trigger level ambiguity problem.

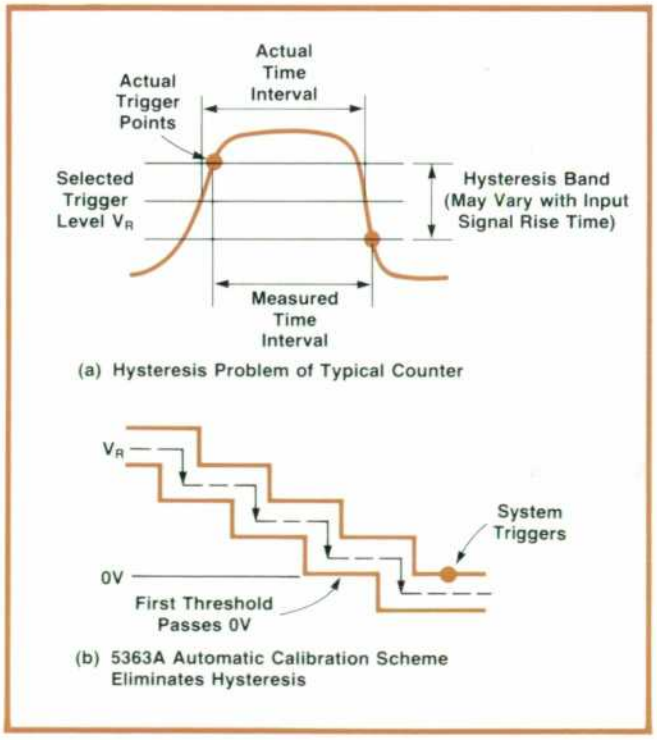

Fig. 2. *(a) Because of hysteresis, the actual trigger point of a counter is offset from the selected level by an unknown amount, often 50 mV or so. (b) Model 5363A Time Interval Probes automatically calibrate themselves; they detect the actual reference voltage at which a grounded probe triggers, then add this offset to the reference voltage in subsequent measurements. Actual trigger level is then within a few millivolts of the selected level.*

Some counters use hysteresis compensation to give a more usable indication of the actual trigger voltage. Here an approximation of one-half the hysteresis band is added to (positive slope) or subtracted from (negative slope) the selected trigger level or reference voltage. Such compensation does not eliminate the hysteresis window, but it does make counters with a large window more usable.

The other limitation of a counter input amplifier is that it provides either a 50Ω termination or a high input resistance with a rather large shunt capacitance, typically about 30 pF. This limitation makes it difficult to transport the signal to the counter without impedance transformation or distortion caused by the shunt input capacitance.

Counters have two other subtle problems. First, start and stop channels of counters often have different propagation delays, and these must be compensated for precision time interval measurement. Second, the propagation delay through a counter input amplifier is a function of the amount that the input signal goes past the trigger level, so careful understanding of the behavior of counters is necessary for accurate use of a counter in measuring precision time intervals.

Because counters are basically digital, they have been the workhorses in systems for measuring time intervals. Many have programmable front ends, and can select trigger levels and output the results via digital interfaces such as the HP Interface Bus (HP-IB). Of course, the programmable counter suffers from the same trigger level accuracy and signal conditioning problems as the manual counter.

Time Interval Probes

The 5363A Time Interval Probes consist of two low-capacitance active probes and associated electronics in a separate box. Any universal electronic counter can be used with the probes, but to get the full benefit of the system, the counter should have input amplifiers that have at least 100 MHz bandwidth and

© Copr. 1949-1998 Hewlett-Packard Co.

at least 10 nanoseconds resolution when measuring single-shot events. True time interval averaging is desirable.

The probes solve the problem of trigger level indeterminacy by an automatic calibration scheme (see Fig. 2) instead of hysteresis compensation. The user grounds the probe to be calibrated and presses a front panel switch. This causes the reference voltage, V_R in Fig. 2, to move down in a stair-step fashion (up for negative slope calibration) in 1-mV steps until the device just triggers at zero volts. Knowing the value of V_R at this point allows the system to adjust itself so the actual trigger voltage corresponds to the trigger level selected by the user. Recalibration when slopes or probes are changed assures constant triggering accuracy.

Any trigger voltage from −9.99 volts to +9.99 volts may be set in 10-millivolt steps manually by setting two front-panel thumbwheel switches. Remote setting of the trigger voltage is also possible.

The probes' 20-volt dynamic range and precise trigger-point determination eliminate the need for attenuators in most cases and allow measurements closer to the top and bottom of the waveform than was previously possible.

Circuit loading caused by shunt capacitance is minimized by the probes' small 10 pF input capacitance. Input resistance is 1 MΩ.

The problem of propagation delay differences in the start and stop channels is solved by an adjustable delay in the stop channel, which can be used to compensate for delay differences as large as two nanoseconds. When a counter that has a minimum time interval limitation is used, a fixed ten-nanosecond delay can be switched in to allow measurements down to zero time.

For automated waveform analysis, such as in production testing, the probes can be controlled remotely, for example by a desk-top calculator. Option 011 adds the programming ability of the calculator and HP-IB to the probes.

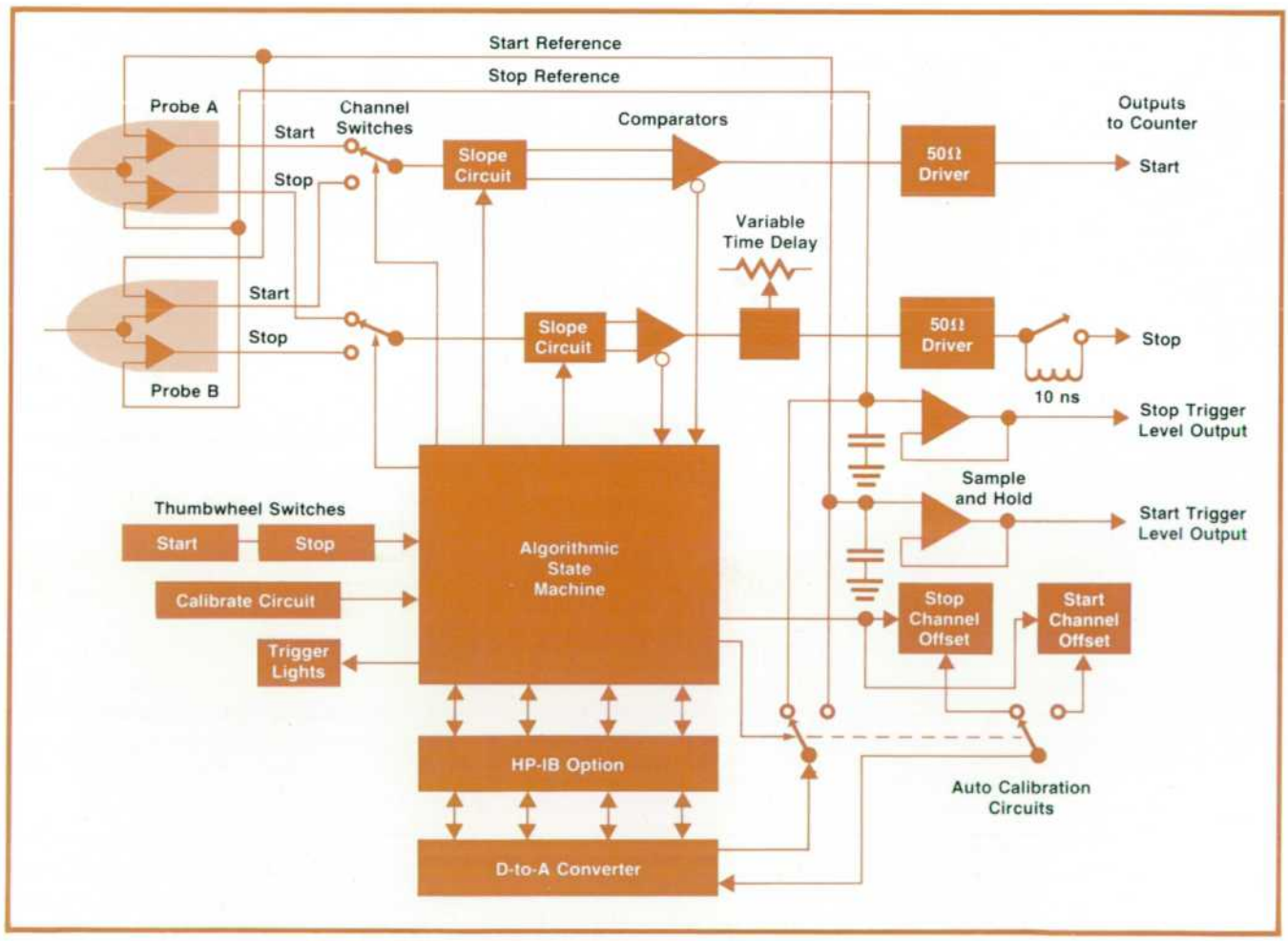

Fig. 3. *Each probe has a potential start and stop input. Red and green trigger lights above each probe indicate which probe has been selected for stop and start, respectively, and flash off when triggering occurs. A state machine controls system operation.*

© Copr. 1949-1998 Hewlett-Packard Co.

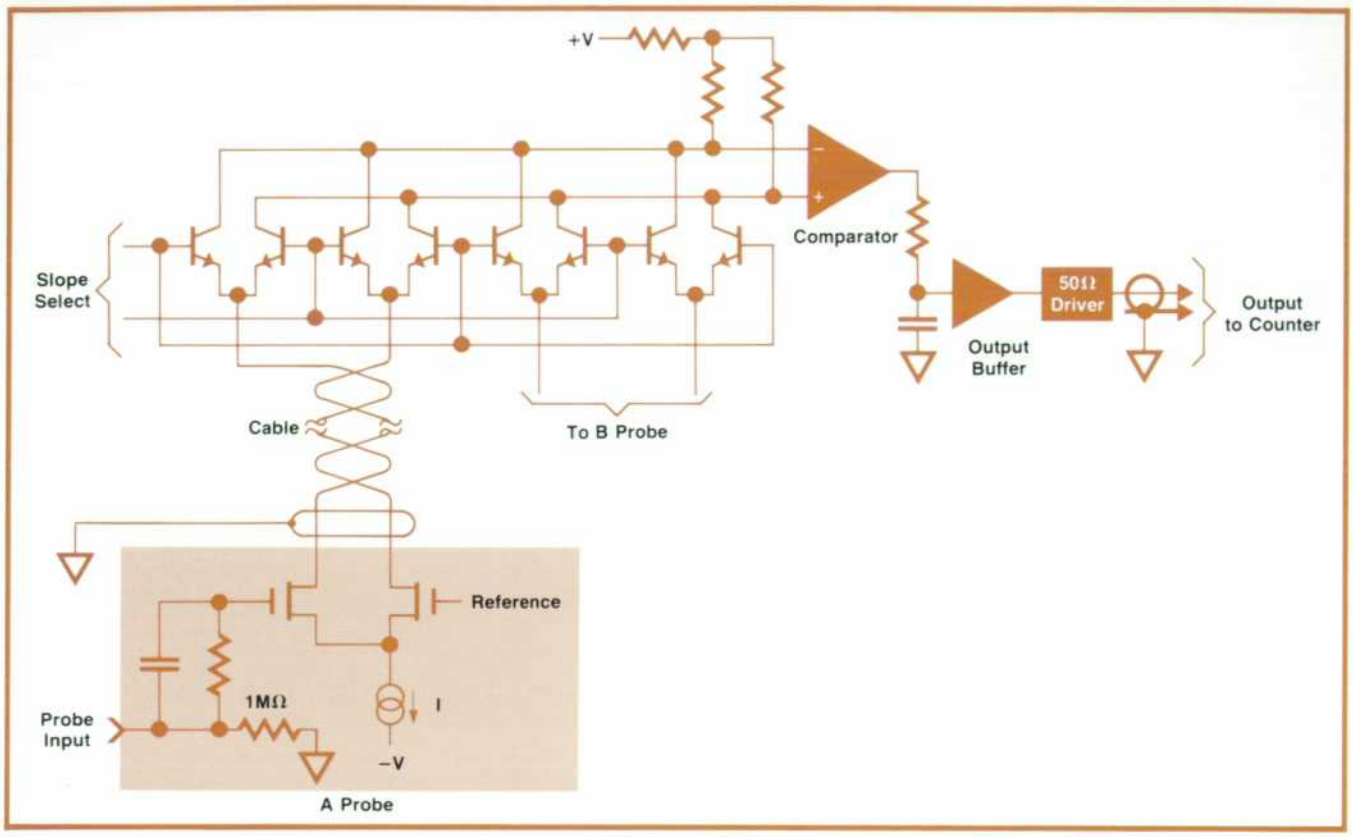

Fig. 4. *Start or stop channel is basically a voltage comparator. The input circuit presents a standard comparator with a signal that has a single transition direction and a small dynamic range centered in the comparator's window.*

Probe Design

The 5363A Time Interval Probes are designed to enhance the accuracy of time interval counters by providing signal conditioning and precision voltage references for the counters' front ends. The probes' outputs are fast-zero-crossing signals for which a counter's front end is optimized. The probes are simple to understand and use, fully programmable, and rack mountable for systems use.

As the block diagram, Fig. 3, shows, the 5363A has two active probes, each with a potential start and stop input. Either probe can be used alone to measure a rise time, for example, or used with the other probe to measure a time delay between two separate signals. Probe selection for start and stop inputs may be done either by means of front-panel thumbwheel switches or remotely. Green and red lights over each probe input turn on to indicate that the associated probe has been chosen as the start and/or stop input, respectively. These lights flash off when the selected start or stop threshold has been passed in the specified direction.

A simplified schematic diagram showing the start or stop signal path is shown in Fig. 4. Taken as a whole, the circuit can be considered a voltage comparator: the analog input is compared to a dc reference and a digital output indicates which is larger. To overcome the limitations of commercial comparators in this application, an input circuit was designed that presents a standard comparator with a signal having a single transition direction and a small dynamic range centered in the comparator's range window.

The heart of the input circuit is a source-coupled differential pair of high-gain, low-capacitance double-diffused MOS FETs located in the probe. Acting as a current switch through load resistors, this pair compares the input signal to a reference voltage and presents a limited-range differential signal to the voltage comparator.

Slope switching and channel selection are done by a high-frequency transistor quad connected in the path of the differential pairs (see Fig. 4). Thus any of the differential lines can be connected to either of the differential comparator inputs. When a channel is chosen, the correct FET differential stage is connected to the comparator, and when the slope is changed, the polarity of this connection is changed so the comparator always sees the same signal direction for comparison. This sameness in direction is necessary for constant delays through the system regardless of slope selection. The output of the comparators is then translated into a −0.5V-to-+0.5V signal

© Copr. 1949-1998 Hewlett-Packard Co.

with a slew rate of 500 volts per microsecond for use with a counter's 50Ω inputs. Fig. 5 shows the outputs for a typical input signal and trigger levels.

In the stop channel path there is a varicap delay vernier that allows the differential delays in the entire system, including the counter, to be adjusted from the front panel. Measurements can be made down to zero time. For counters that have a 10-ns minimum time interval measuring capability, a precision 10-ns delay line can be switched into the stop channel, either from the front panel or remotely.

The +9.99-to-−9.99-volt digital references that are supplied to the comparator section of the probe system are derived from a single digital-to-analog converter that is timeshared to save cost and keep the differential voltage inaccuracies between the channels to a minimum. These reference voltages are set by the two front-panel thumbwheel switches or remotely programmed. They are converted to analog voltages and stored in two sample-and-hold circuits.

To get a very accurate trigger level setting, a calibration needs to be done. The time interval probes do it automatically. This automatic calibration, activated from the front panel or remotely, detects the actual voltage at which a grounded probe triggers, stores that voltage, and adds that offset into the reference voltage supplied by the D-to-A converter. This scheme is controlled automatically by an internal processor; it guarantees that for a given probe and slope setting the actual trigger point of the probes is within the accuracy specifications for all trigger voltage settings.

Measurement Considerations

The 5363A goes a long way toward solving time interval measurement problems. However, care must be taken when using the probes or any time interval instrument to ensure good results.

The first thing that must be remembered is that the accuracy of the measurement is strongly influenced by the accuracy of the counter used with the probes. While the probes will improve or eliminate counter inaccuracies caused by trigger point uncertainty and start-stop channel mismatch, it will do nothing for measurement errors caused by quantization (plus or minus one count), time base short-term instability, or non-averaging bias caused by input coherence with the counter time base.[3] The user must, therefore, understand the accuracy specification of his counter to understand which factors are replaced or eliminated by the 5363A and which must be added to those in the 5363A specification.

A second major consideration is the coupling of the input signal to the probe. For reliable time interval measurements, just as when using high-frequency oscilloscope probes, it is important that the probe tip make good contact with the measurement point and that a solid, low-impedance ground be provided to assure a good reference point.

Even though the 5363A probes have lower capacitance than most standard counter inputs, they can still cause signal distortion, especially when driven from high-impedance sources. Loading effects can be reduced somewhat by removing the outer tip and using the smaller inner tip. This reduces the probe capacitance by approximately 1.5 pF.

Still another limitation on measurement accuracy is the bandwidth or rise time of the input amplifiers. When making measurements of fast rise times, the rise time actually measured is, to a first-order approximation, the square root of the sums of the squares of the unknown rise time and the input amplifier rise time. This calculation is not necessary when making pulse width or propagation delay measurements if the start and stop signals have similar rise times and if triggering occurs at the same relative point on the waveforms. In such cases the effects in the start and stop channels will cancel.

The 5363A also places two limitations on the input signal. First, the input signal must be at least 5 ns wide at the trigger levels. This is because, although the input stage has a bandwidth of 350 MHz, some of the components used in the signal path after digitization occurs have a maximum repetition rate of 100 MHz. Second, at least 100 mV of overdrive is required, that is, measurements within 100 mV (or 8%, whichever is greater) of the top and bottom of the waveform are not guaranteed accurate. The reason is that for the comparator (or any comparator) to toggle, a finite amount of energy must be applied to the inputs. This energy can be expressed as a certain voltage applied for a certain length of time. While the 5363A will indeed give a reading with less overdrive than the specified minimum, this energy consideration makes it impossible to place boundaries on the comparator switching speed, and therefore accuracy cannot be guaranteed.

Finally, a few words about the necessity for calibra-

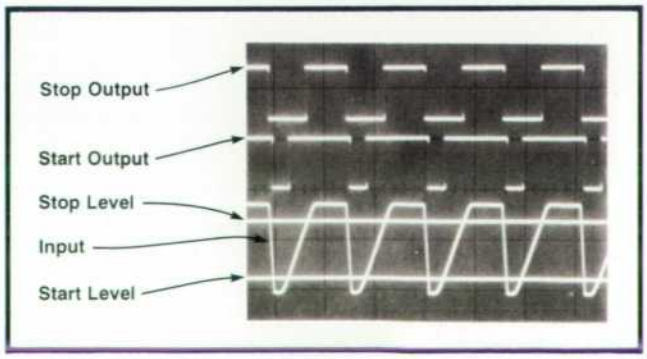

Fig. 5. *Outputs to counter for a typical input signal and trigger levels.*

© Copr. 1949-1998 Hewlett-Packard Co.

tion may be in order. Without any calibration, the 5363A trigger level error will be less than 100 mV, or about the same as many counters. The time errors that arise from this may be insignificant when measuring high-slew-rate signals. For example, with a 1V/ns input slew rate, the error caused by lack of trigger level calibration will be less than 100 ps, which is insignificant in many applications. While calibration will always give a more accurate reading, the user may be able to reduce measurement time if the input signals are fast enough.

Acknowledgments

Eric Havstad provided the mechanical design and test procedures. Eric then acted as project leader for the probes during the first production runs. The mechanical design of the probe bodies and their tooling was done by Carl Spalding. Holly Cole provided marketing support.

References

1. D. Martin, "Measure Time Interval Precisely," Electronic Design 24, November 22, 1974.
2. W.A. Fischer and W.B. Risley, "Improved Accuracy and Convenience in Oscilloscope Timing and Voltage Measurements," Hewlett-Packard Journal, December 1974.
3. D.C. Chu, "Time Interval Averaging: Theory, Problems and Solutions," Hewlett-Packard Journal, June 1974.
4. R. Schmidhauser, "Measuring Nanosecond Time Intervals by Averaging," Hewlett-Packard Journal, April 1970.

SPECIFICATIONS

HP Model 5363A Time Interval Probes

DYNAMIC RANGE: +9.99V to −9.99V
VOLTAGE RESOLUTION: 10 mV
TIME RESOLUTION: Depends on counter used (typ. 10 ps with 5345A T.I. Avg).
IMPEDANCE: 1 MΩ shunted by 10 pF
EFFECTIVE BANDWIDTH: 350 MHz (or 1 ns rise time)
MINIMUM TIME INTERVAL: 0.0 ns
MINIMUM PULSE WIDTH: Input signal must remain below and above trigger point for at least 5 ns (i.e., max. repetition rate of square wave = 100 MHz)
ABSOLUTE ACCURACY:

$$\pm 1\text{ ns} \pm \frac{\text{Trigger Level Accuracy}^{**}}{\text{input slew rate at trigger point}}$$

Trigger Level Accuracy* = ±8 mV ±0.15% of trigger point setting ±0.2 mV/°C
Differential Trigger Level Accuracy*: Used when both trigger points are set to the same voltage. Actual trigger points will be within 3 mV ±0.3% of trigger point setting.
MAX INPUT VOLTAGE: 30V peak
LINEAR OPERATING RANGE: ±10V
OUTPUT TO COUNTER: Separate start and stop channels, −0.5 to +0.5V into 50Ω, <2 ns rise time
TRIGGER LEVEL OUTPUTS: Trigger point setting ±75 mV
DELAY COMPENSATION RANGE: 2 ns adjustable about 0.0 ns or 10.0 ns
POWER: 100, 120, 220 or 240 Vac +5 −10%; 48 to 440 Hz; 30 VA max.
WEIGHT: 3.35 kg (7 lb 6 oz)
DIMENSIONS: Rack height 88.9 mm (3.5 in); Half rack width module 212 mm (8.38 in); depth 248 mm (11.6 in) Probe length 122 cm (4 ft)
ENVIRONMENTAL: Operating temperature 0°C to 55°C
OPTION 011: HP-IB programming of all functions except delay adjust vernier (which can be measured in a system).
PRICES IN U.S.A.:
5363A Time Interval Probes, $1500.
Option 011 HP-IB Programming, $250.
RECOMMENDED COUNTERS
5345A Counter (2 ns single shot TI, TI averaging), $4250.
5328A Opt. 040 Universal Counter (10 ns single shot TI, TI averaging), $1650.
5360A/5379A Computing Counter (1 ns accuracy, 0.1 ns resolution for single shot TI. Programmable.), $9500.
MANUFACTURING DIVISION: SANTA CLARA DIVISION
5301 Stevens Creek Boulevard
Santa Clara, California 95050

* After calibration.
** Within the range between 100 mV or 8% (whichever is greater) from the top or bottom of input signal.

Steven E. Schultz
Steve Schultz was project leader for the 5363A Time Interval Probes. With HP since 1971, he helped design the 5345A Counter and served as project leader for the 59300 Series ASCII Modules. Steve received his BSEE degree in 1970 from the University of California at Berkeley and his MSEE degree in 1975 from Stanford University. His interests include electronics, woodworking, riding dirt motorcycles, and working on his and his wife's new house in Portola Valley, California, just across San Francisco Bay from his native Oakland.

Robert W. Offermann
Stockton, California native Bob Offermann is a graduate of California Institute of Technology. He received his BS degree there in 1971 and his MS in electrical engineering two years later after taking a few months off to get some circuit design experience. He designed the signal processing circuits for the 5363A Time Interval Probes. In his spare time Bob enjoys sailing, swimming, gardening, and the theater, but finds that just maintaining his house and yard often gets first priority. He and his wife live in Saratoga, California.

Charles R. Trimble
Recently named manager of integrated circuits research and development at HP's Santa Clara Division, Charlie Trimble was section manager for HP-IB products and precision time-interval measurements. He's been with HP for eleven years, most of them in the area of digital signal processing, where he holds four patents. Born in Berkeley, California, Charlie attended California Institute of Technology, graduating with a BS degree in 1963. He stayed on to get his MSEE in 1964 and joined HP the same year. He and his wife now live in Los Altos, California, but are currently building a new home in the nearby hills, an activity that leaves little time for Charlie's other interests, which include sailing, chess, and hiking.

© Copr. 1949-1998 Hewlett-Packard Co.

Flow Control in High-Pressure Liquid Chromatography

Operation at high pressures introduces many problems in the control of fluid flow when two solvents must be mixed in a precise ratio. Hydraulic capacitors provide the key to precision solvent mixing

by Helge Schrenker

HIGH-PRESSURE LIQUID chromatography is capable of analyzing a wide range of chemical substances that cannot be analyzed by the better-known gas chromatography. Nevertheless, it has not been widely used, technical difficulties having discouraged application of this potentially useful technique. Recent improvements, however, in column-packing materials, high-pressure pumps, and detectors are now stimulating a growing interest in this technique.

High-pressure liquid chromatography (HPLC) is similar to gas chromatography in that the chemical components of a mixture are separated as the mixture is forced through a narrow tube, commonly called a column, packed with fine particles. In gas chromatography, the substance is carried through the column in vaporized form by an inert gas, whereas in HPLC it is carried through in liquid form by a solvent. Because the substance does not have to be vaporized, HPLC can be used on a broad range of substances that are not analyzable by gas chromatography.

Just as the use of gas chromatography received a great impetus by the development of temperature programming, which broadened the range of mixtures that could be analyzed and speeded up lengthy gas chromatograph procedures, HPLC is obtaining a similar impetus from developments in gradient elution systems. The technical problems involved, however, are far more complex.

Gradient Elution

In a gradient elution system, the carrier is a mixture of two or more solvents and the mixing ratio of the solvents is changed according to a predetermined program as the analysis proceeds.

To maintain the calibration of the instrument and to assure repeatable results, solvent flow must be controlled accurately. Problems in controlling solvent flow arise because the solvents can differ in viscosity, compressibility, and other characteristics. Furthermore, the volume of the solvent mixture is not necessarily equal to the sum of the volumes of the individual solvents.

These problems are compounded by the need to deliver the solvent to the separation column under high pressure. Because the column must be tightly packed with small, uniform particles to obtain adequate separation of the substance's components, high pressure—commonly 3000 psi or more—is needed to force the substance through in a reasonably short time.

Three basic requirements should be fulfilled by a gradient elution system:

1. The programmed mixing ratios delivered to the column inlet must be repeatable. This becomes especially critical in lengthy procedures because the relationship between the time of retention of a chemical component and the solvent mixture ratio usually is logarithmic.
2. Programmed mixing ratios must be consistent regardless of the solvents used.
3. Flow rate through the column must be constant or at least definable in each segment of the program. This is important not only because it affects retention time but also because it affects peak areas since quantitative results are directly dependent on flow rate.

Solvent Mixing

Presently, three types of gradient elution systems are in common use. One, shown in Fig. 1a, feeds the solvents at low pressure into a mixing chamber upstream from a single high-pressure pump that feeds the column. Because the output flow of the low-pressure pumps must always equal the output flow of the high-pressure pump, control of this system is com-

© Copr. 1949-1998 Hewlett-Packard Co.

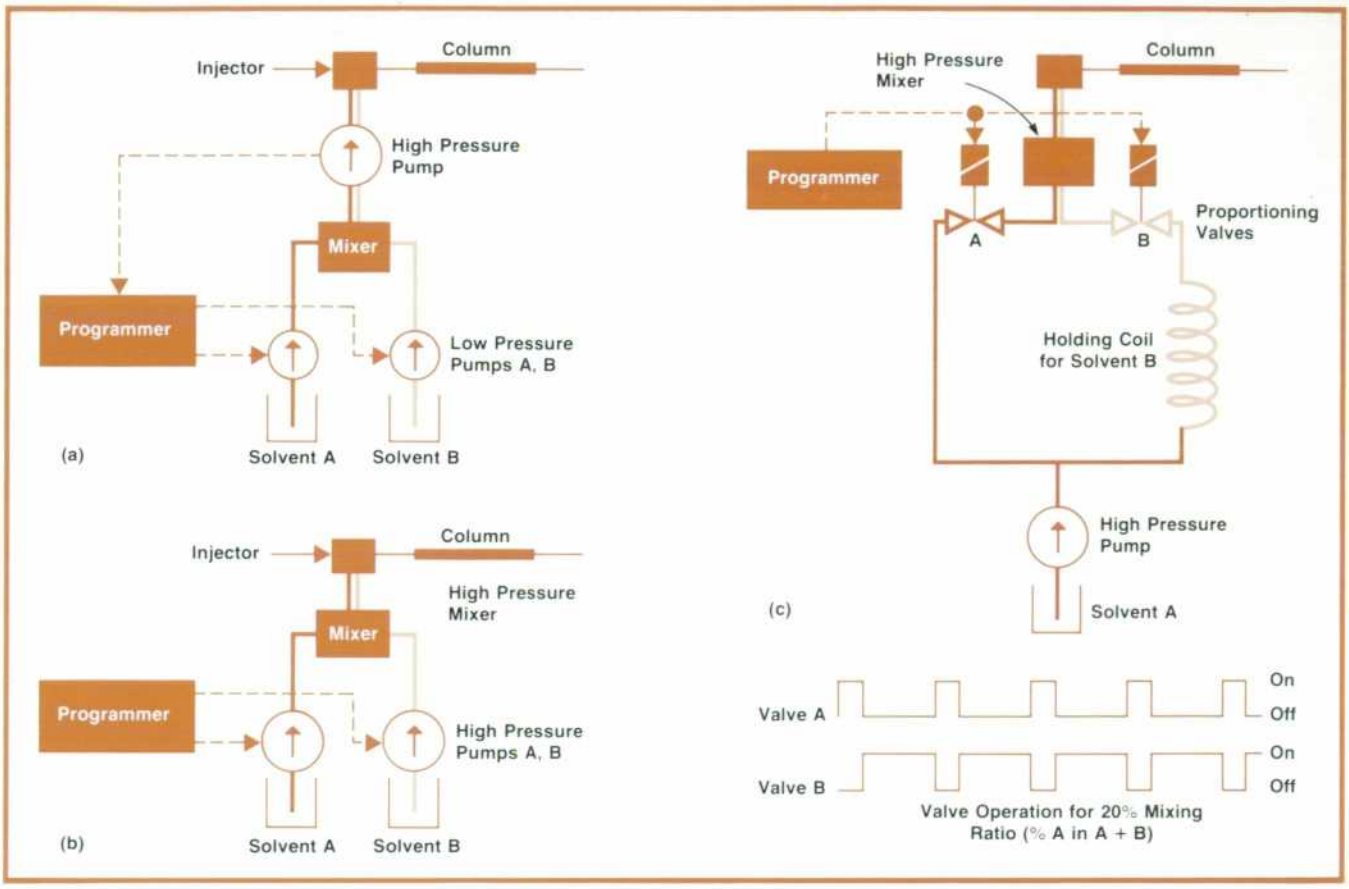

Fig. 1. *Three types of gradient elution systems. The type shown in (a) uses two low-pressure pumps to control the flow of solvents to the high-pressure pump. That in (b) has two high-pressure pumps to control solvent flow. The one in (c) uses a single pump with a holding-coil bypass and proportioning valves.*

plex and it becomes increasingly difficult if the viscosities of the two solvents are not equal. This is because, if the solvents do not have similar viscosities, the pressure drop at the column input changes as the mixing ratio changes.

In the system shown in Fig. 1b, two high-pressure pumps feed a mixing chamber close to the column input. This system is also affected by differing solvent viscosities and compressibilities.

A third system uses a single pump and a pre-loaded "holding" coil for the second solvent, as shown in Fig. 1c. Proportioning valves at the input to the mixing chamber control the mixing ratio. For precise control of the ratio, the proportioning valves may be on-off solenoid types with one turning on as the other turns off. The programmer controls the on-off cycles in a manner that might be called complementary pulse-width modulation, as shown in Fig. 1c.

To achieve homogeneous mixing with this system, a relatively large mixing chamber is required. The finite quantity of solvent in the holding coil limits the applications of this method in unattended automatic operation and in preparative work (separating and recovering components of a mixture in quantity). Also, the flow rate in this system could change as the viscosity of the solvent mixture changes.

The high-pressure pumps in all of these systems change their delivery rates if the column back pressure changes (see Fig. 2). This is because the compressibility of the solvents is not negligible at high pressures and it is also affected by temperature.

Obviously, some means of feedback flow control is required for a gradient elution system to operate accurately. Such a system, based on a hydraulic capacitor, has been designed for the Hewlett-Packard Model 1010B High-Pressure Liquid Chromatograph (Fig. 3).

Pulsation Filters

A hydraulic capacitor, used to smooth out high-pressure pump pulsations, is shown in cross-section in Fig. 4. It consists of a rigid vessel filled with fluid of known compressibility. A small fraction of the space is separated from the compressible fluid by an impermeable membrane. The solvent mixture passes through this separated space.

© Copr. 1949-1998 Hewlett-Packard Co.

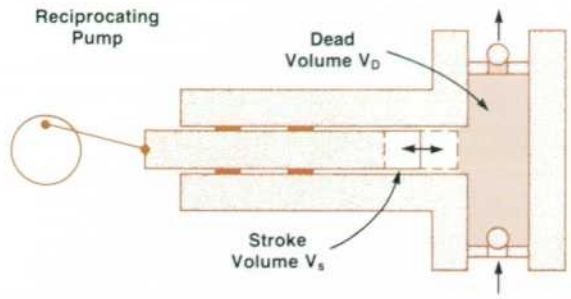

At zero backpressure, $q_o = f \times V_s$ where q is the flow rate in ml/minute and f is the frequency of pump reciprocation.

At backpressure p, $q_p = fV_s(1 - a \times \kappa \times p)$ where a is the ratio V_c/V_s of chamber volume ($V_c = V_s + V_D$) to stroke volume and κ is the compressibility of the fluid.

The change in flow rate between 0 and p backpressure is then:

$$\frac{\Delta q}{q_o} = \frac{fV_s - fV_s(1 - a\kappa p)}{fV_s} = a\kappa p$$

For example, the compressibility κ of hexane is 1.5×10^{-4} bar^{-1}. At a pressure change Δp of 100 bar in a pump with V_c/V_s of 5, the flow rate q would change by a factor of −0.075, or −7.5%.

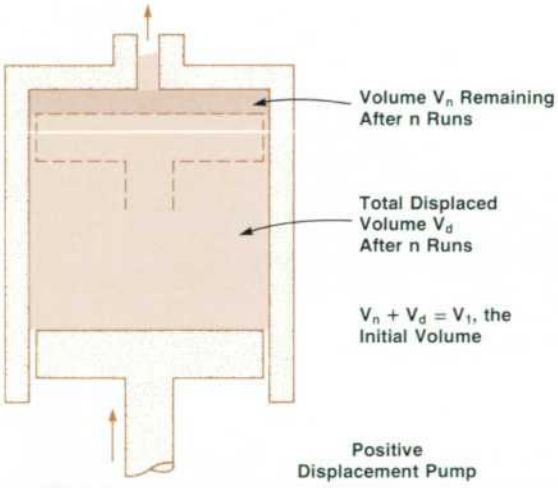

$V_n = V_1 - q_p t_r n$ where q_p is the average pump delivery rate and t_r is the run time.

On the first run, the volume compression for a pressure increase of Δp is: $\Delta V_1 = V_1 \kappa \Delta p$

(V_1 is assumed to be the volume at the starting pressure.)

After n runs: $\Delta V_n = (V_1 - q_p t_r n)\kappa \Delta p$

Assuming a linear pressure increase of Δp during a gradient run, the difference in average flow rate between the first run and after n runs is:

$$\frac{\Delta q_{p,1-n}}{q_p} = \frac{\Delta V_1 - \Delta V_n}{t_r q_p} = \kappa \Delta p n \qquad (\text{for } n < V_1/t_r q_p)$$

Using hexane again, with a run time t_r of 15 minutes, a flow rate q_p of 1 ml/minute, an initial volume of 250 ml, a pressure increase Δp of 100 bar, and 16 runs ($n < V_1/t_r$), the flow rate changes by a factor of 0.24, or 24%.

Fig. 2. *The change in flow rate caused by fluid compressibility in a reciprocating pump and in a positive displacement pump.*

A restriction in the solvent flow path, which could be the chromatographic column itself, is the hydraulic analog of a resistor, so the unit can function analogously to an RC filter (Fig. 5). With a sufficiently large fluid volume (large C), adequate smoothing of the pump pulsations can be obtained with a relatively low value of R on the output side.

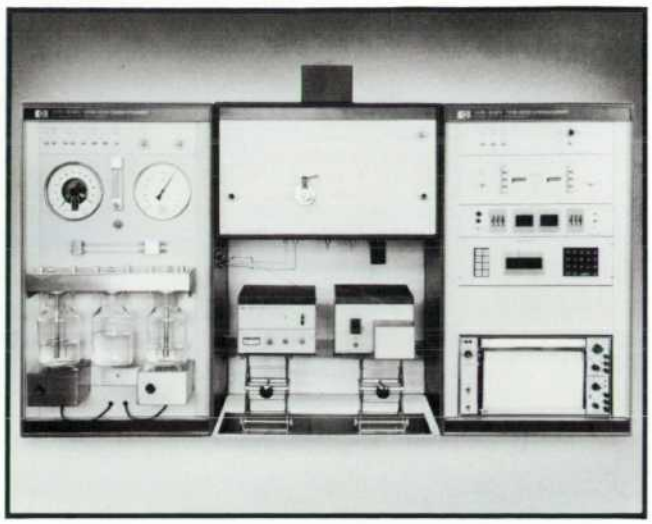

Fig. 3. *The Model 1010B Liquid Chromatograph. The solvents are in the glass containers on the left; the pumps are inside this cabinet. The column is inside the center cabinet with the injection port protruding from the panel. The detectors are on the shelf below. The flow controller is in the cabinet at right.*

The basic equation of a capacitor ($dV = Cdp$) shows that pressure change and volume change in a hydraulic capacitor are proportional to each other, with capacitance C as the proportionality factor. Thus, by measuring the pressure decrease ΔP_c at the capacitor during a fraction Δt of a discharge period, the change in liquid volume ΔV_c, and the flow rate $\Delta V_c/\Delta t$ delivered to the column during that period, can be derived as shown in Fig. 6. The residual pressure os-

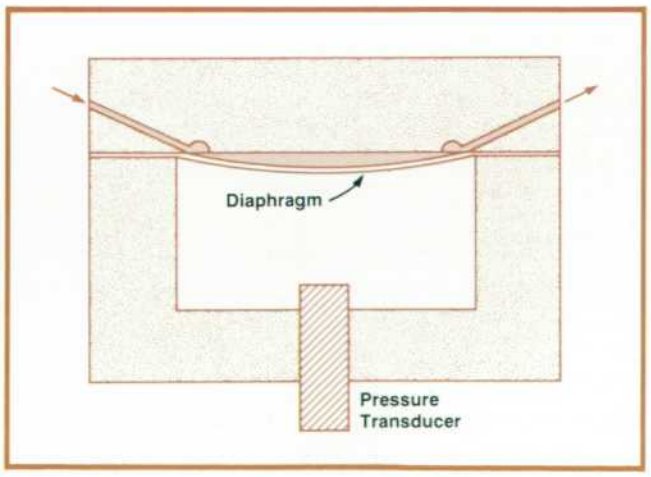

Fig. 4. *Hydraulic capacitor consists of a rigid vessel filled with a compressible fluid. The capacitance C is equal to the ratio of the change volume V to a change in pressure p or, $C = dV/dp$. Since $dV = V\,dp\kappa$, $dV/dp = V\kappa = C$.*

© Copr. 1949-1998 Hewlett-Packard Co.

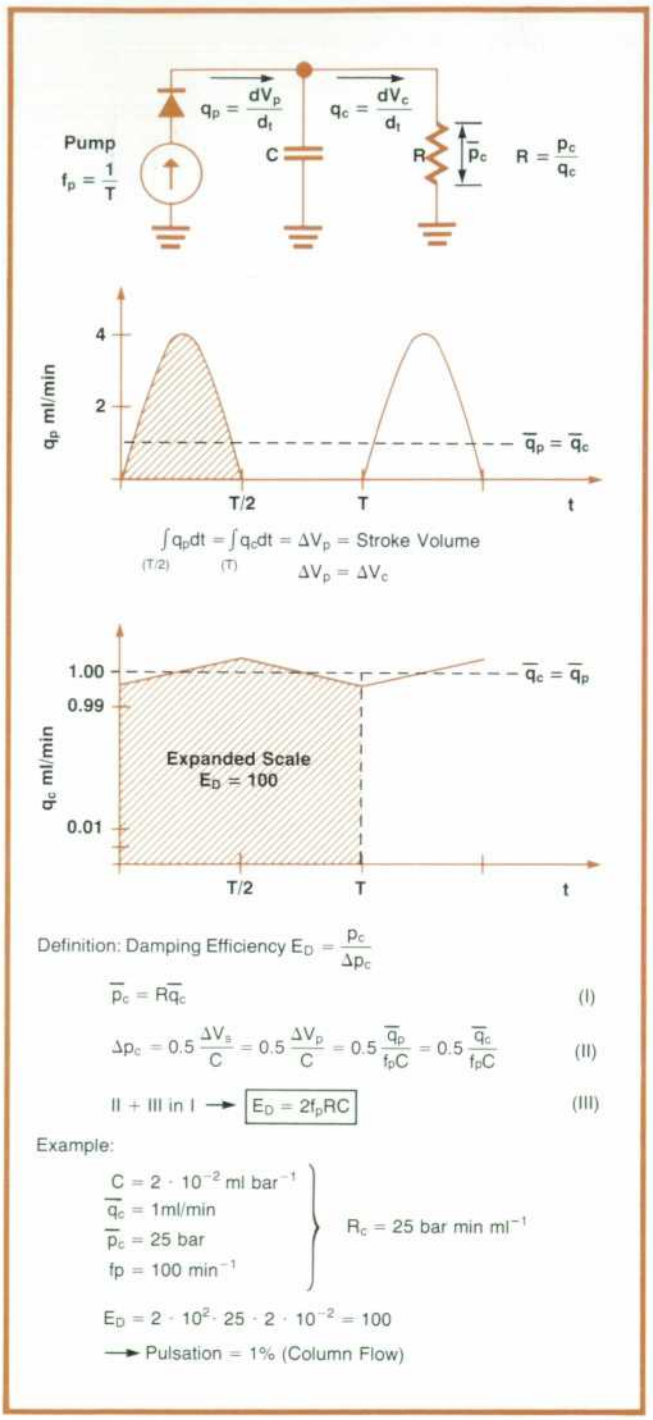

Fig. 5. *Hydraulic capacitor (C) and a flow restriction (R) are the analog of an RC filter. The diode is the analog of the pump's check valve. As the equations show, adequate smoothing can be obtained with a relatively low value of R provided C is large enough.*

cillations are extremely small, so ΔP_c is not directly measured but is derived from integrating d_P over t, (see Fig. 6).

The flow rate sample taken during Δt is representative of the average column flow. The measurement is independent of column resistance and back pressure, since fluid flow is determined by the capacitance and integration time.

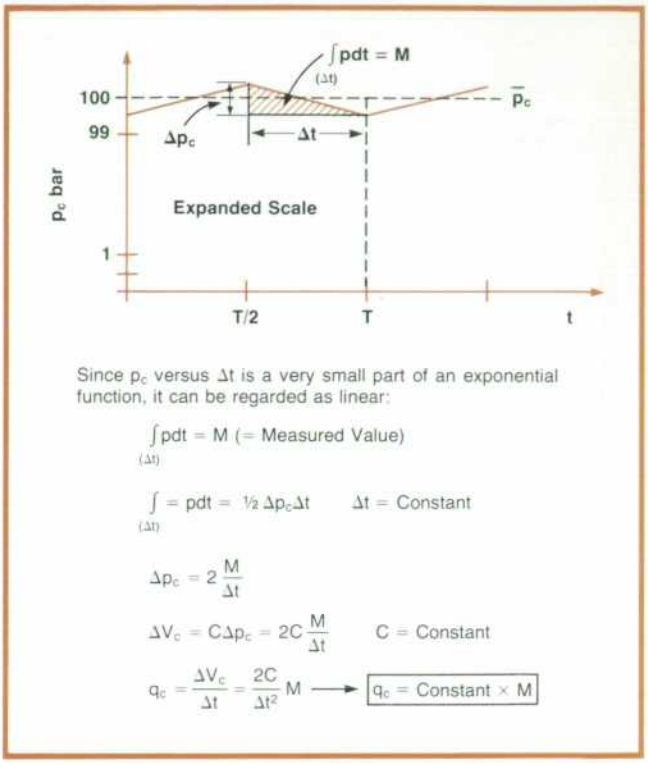

Fig. 6. *Integrating the change in pressure during capacitor discharge for a period Δt gives a measure of fluid flow during this time interval.*

Flow Rate from Pressure Variations

The flow measurement and control system used in the Model 1010B HPLC is shown in Fig. 7. A pressure transducer is installed in the hydraulic capacitor. Measurement of the pressure is synchronized with the pump so the measurement is made only during the discharge phase. The time integral of the ac component of the transducer output is proportional to Δp_c and is thus proportional to flow.

The ac component is fed to a voltage-to-frequency converter. A counter totalizes the output of the V-to-F converter, effectively integrating the transducer output. Twenty pump cycles are totalized, and thus averaged, at a time. At 100 pump strokes per minute (50-Hz power line), this means a new reading of average flow every 12 seconds.

At the end of each 12-second integration period, the counter's contents are compared digitally to the set point (established either by thumb-wheel switches or by the gradient programmer). Any error is then used to adjust the pump stroke setting to bring the flow rate to the set point value.

The averaged dc output of the pressure transducer represents absolute pressure, and is used as a constant in the calculations to compensate for the in-

© Copr. 1949-1998 Hewlett-Packard Co.

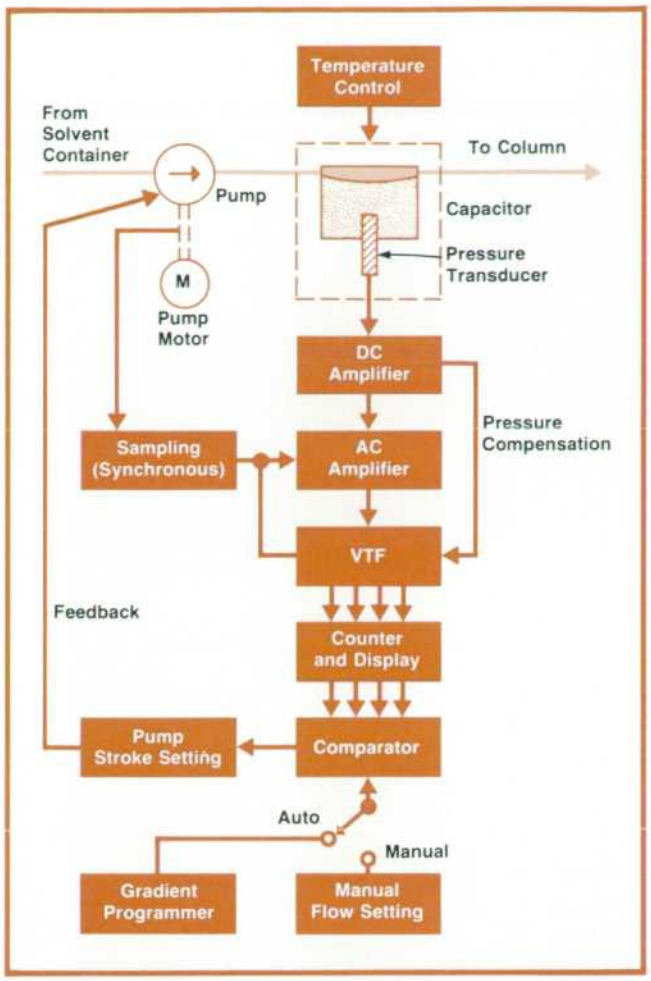

Fig. 7. *Flow control system uses the ac component of the pressure transducer output.*

fluence of pressure on the compressibility constant of capacitor C. The effects of temperature on fluid compressibility are circumvented by using a temperature control system to maintain the capacitor at a constant temperature.

Flow rates in a range of 0.10 to 9.99 ml/minute are measured and controlled by this system with a repeatability of ±1% of setting ±0.02 ml/minute.

As shown in Fig. 8, this flow control system is incorporated into a gradient elution system of the type shown in Fig. 1b. The flow rates of the two pumps are controlled independently and their outputs mixed in a low-volume (0.5 ml) mixing chamber immediately upstream of the sample injection port.

Programming

A gradient program is entered by way of a calculator-like keyboard on the gradient programmer. The program is entered as a series of linear segments that approximate the desired program curve, as shown by the typical program curve of Fig. 9. Each segment is specified by three program entries:

1. Flow rate at the beginning of the segment (identical to the flow rate at the end of the previous segment);

2. Flow rate at the end of the segment;

3. Time (T) of the segment. Up to 15 such segments can be stored in the memory. The series of set points within each segment are then calculated during execution of the program.

The system calculates a new set point every 12 seconds.

Because the flow rate programming for each pump is independent of the other, three program modes are possible:

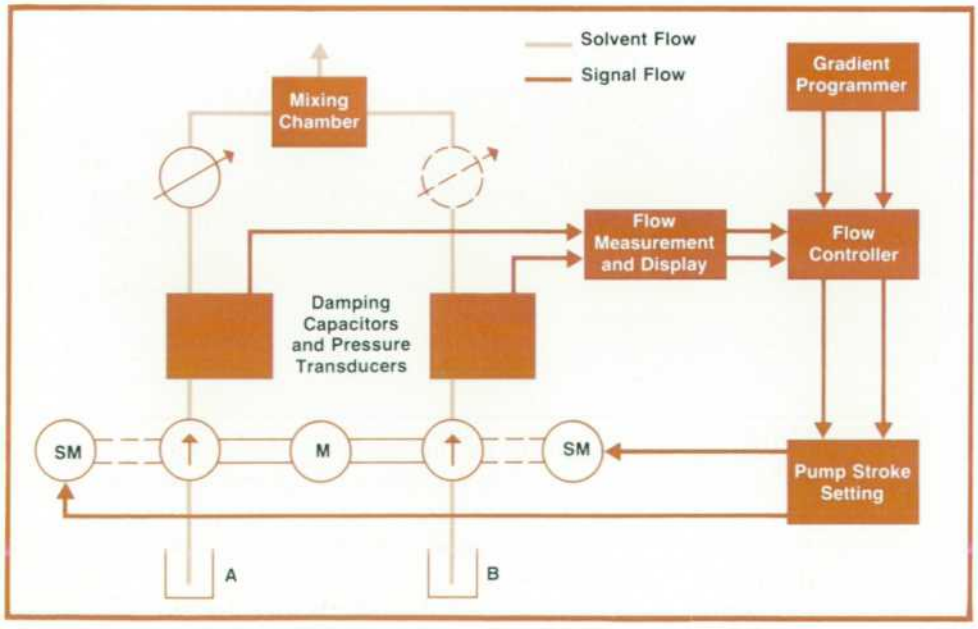

Fig. 8. *Gradient flow control system uses two flow controllers of the type shown in Fig. 7.*

© Copr. 1949-1998 Hewlett-Packard Co.

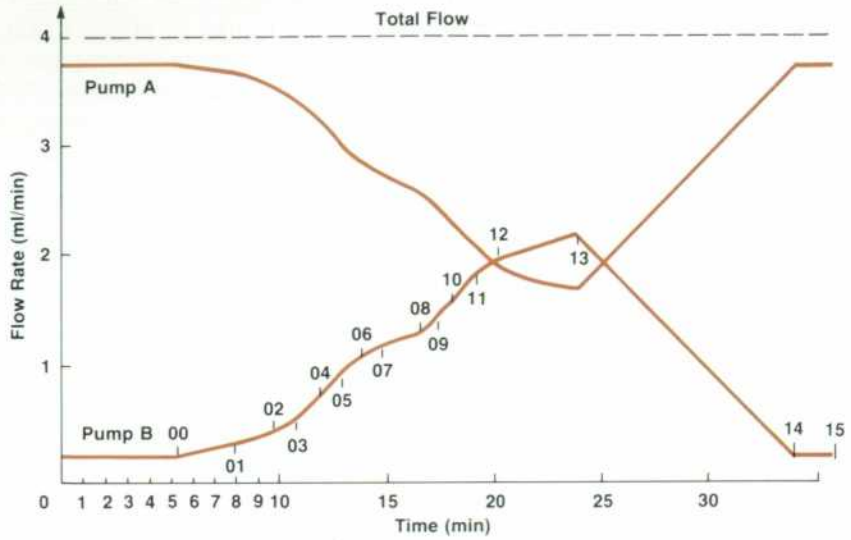

Segment	A ml/min	B ml/min	T min
00	3.76	0.24	5.4
01	3.76	0.24	2.6
02	3.70	0.30	1.8
03	3.60	0.40	1.0
04	3.48	0.52	1.2
05	3.28	0.72	1.0
06	3.04	0.96	1.0
07	2.88	1.12	1.0
08	2.77	1.23	1.8
09	2.64	1.36	1.0
10	2.52	1.48	1.0
11	2.40	1.60	1.0
12	2.13	1.87	1.2
13	2.04	1.96	3.8
14	1.76	2.24	10.0
15	3.76	0.24	2.0
00	3.76	0.24	

Fig. 9. *Typical constant-flow gradient program. The table shows the program entries for this program.*

1. Change the A and B mixing ratio while maintaining constant column flow (A + B) by programming equal but inverse flow rate changes for the two pumps (gradient programming);

GRADIENT ELUTION TEST ON HEWLETT-PACKARD MODEL 1010B

Digitalis Glycosides and Polycyclic Aromatic Hydrocarbons

8 Consecutive Injections

COLUMN: LiChrosorb RP 181, 10μ
50cm × 4mm I.D., heated column at 35°C

MOBILE PHASE: Gradient Elution, 1 min isocratic 5% Acetonitrile.
30 min gradient to 95% Acetonitrile in distilled water.
Initial Pressure: 152 bar. Final Pressure: 73 bar.

A	1.90	1.90	0.10	1.90	1.90	ml/min Water
B	0.10	0.10	1.90	0.10	0.10	ml/min CH_3CN
Time	0.8	29.8	7	99		min

COMPOUNDS	% CH_3CN	R.T.	σ	% σ
Digoxin	32	11.549	0.122	1.06
α-Acetyldigoxin	37	13.166	0.104	0.79
Impurity	39	13.706	0.095	0.69
Digitoxin	45	15.873	0.097	0.61
α-Acetyldigitoxin	50	17.490	0.083	0.47
β-Acetyldigitoxin	52	18.128	0.083	0.46
Phenanthrene	62	21.573	0.083	0.38
Fluoranthene	66	22.728	0.083	0.37
Chrysene	70	24.000	0.081	0.34
Perylene	73	25.265	0.091	0.36

(a)

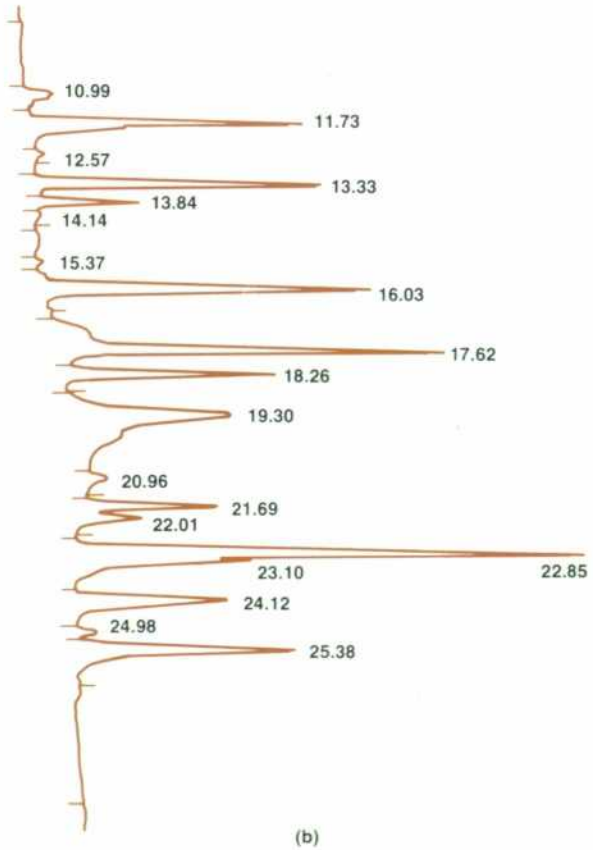

(b)

Fig. 10. *Gradient elution test that includes a programmed pressure change.*

© Copr. 1949-1998 Hewlett-Packard Co.

2. Change the column flow rate while maintaining a constant mixing ratio by programming equal percentage changes of flow in A and B (flow programming);

3. Combine 1 and 2 (flow program superimposed on a gradient program).

obtained with the system used in the Model 1010B Liquid Chromatograph is shown in Fig. 10. The chromatogram is the result of one of eight consecutive runs. The table is the statistical average of the eight runs and shows a deviation of less than 1% for all but one of the peaks. Deviations of less than 1% are considered excellent for any kind of chroma-

GRADIENT ELUTION TEST ON HEWLETT-PACKARD MODEL 1010B

20 PTH Amino Acids 7 Consecutive Injections

COLUMN: LiChrosorb RP 181, 10μ
50cm × 4mm I.D., heated column oven at 35°C

MOBILE PHASE: Gradient Elution, 1 min isocratic 5% Acetonitrile, 15 min gradient to 50% Acetonitrile, 1 min isocratic 50% Acetonitrile. With buffer 0.01 M Sodium Acetate, pH 4.6 Initial Pressure: 152 bar 2ml/min flow

Gradient Program:

A	1.90	1.90	1.00	1.00	1.90	1.90	ml/min Buffer
B	0.10	0.10	1.00	1.00	0.10	0.10	ml/min CH_3CN
Time	0.8	14.8	1.0	3.5	99		min

	% CH_3CN	R.T.	σ	% σ
PTH-L-Aspartic Acid PTH-L-Cysteic Acid (K Salt)	10	4.123	0.093	2.26
PTH-DL-Serine	17	6.916	0.045	0.65
PTH-DL-Asparagine	21	7.804	0.048	0.61
PTH-DL-Glutamine PTH-DL-Glutamic Acid	22	8.343	0.038	0.45
PTH-DL-Threionine	23	8.753	0.038	0.44
PTH-Glycine	26	9.571	0.030	0.31
PTH-DL-Histidine	28	10.453	0.024	0.23
PTH-DL-Alanine	32	11.313	0.059	0.52
PTH-DL-Tyrosine	34	12.199	0.037	0.30
PTH-DL-Arginine	39	13.844	0.051	0.37
PTH-DL-Proline PTH-DL-Methionine PTH-DL-Valine	41	14.407	0.042	0.29
PTH-DL-Trypthophane	43	15.309	0.061	0.40
PTH-DL-Phenylalanine PTH-DL-Isoleucine	45	15.847	0.066	0.42
PTH-DL-Leucine PTH-Phenylthiocarbamyl-DL-Lysine	46	16.216	0.057	0.35

DETECTOR: 1030B UV/VIS Spectrophotometer at 254 nm 0.4 AUFS

(a)

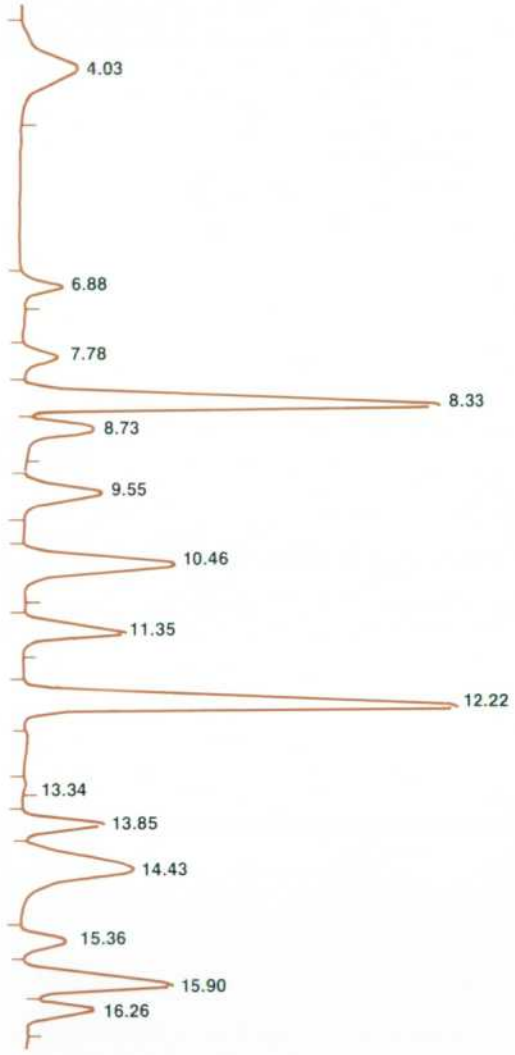

(b)

Fig. 11. *Gradient elution test on the Model 1010B High-Pressure Liquid Chromatograph, using a mixture of amino acid derivatives.*

System Performance

The reproducibility of peak retention times in several consecutive runs is an exacting test of the stability and reproducibility of a gradient and flow control system. An example of the kind of performance

tography. Note that the column pressure changed from 152 to 73 bar during each run, returning to 152 bar for the following run.

Another example is shown in Fig. 11. This is the result of averaging seven runs. Again, the deviations in

© Copr. 1949-1998 Hewlett-Packard Co.

retention time are of a very low order.

Acknowledgments

The gradient elution system originated with Ulrich Busch who was assisted by Gerhard Jerabek. Final engineering was by Michael Wollgast (electronics) and Henning Gamlich and Alfons Schmid (mechanics). The evaluations presented on pages 22 and 23 were measured and computed by Robert Brownlee of the LC Applications Lab.

Helge Schrenker

Helge Schrenker joined the Hupe and Busch Company in 1969 and participated in the design and development of the Model 1010 HPLC. As time went on, he became more and more involved in marketing activities and when Hupe and Busch joined Hewlett-Packard in 1973, he was named LC marketing manager. He has a degree in physics from the Fachhochschule für Physik at Wedel/Holstein, German Federal Republic. Prior to Hupe and Busch, Helge had worked three years in the marketing of analytical instruments. In his spare time, Helge enjoys hiking and waterskiing, and he does some photography.

SPECIFICATIONS

Hewlett-Packard Model 1010B Liquid Chromatograph

SOLVENT STORAGE: Glass reservoirs, 1 liter capacity, with magnetic stirrer, vacuum 760 to 250 torr, controlled heating ambient to 150°C.

PUMPING SYSTEM: Orlita dual-piston diaphragm pump; max. pressure to 3750 psi, flow 0-600 ml/hr, column pressure to 3750 psi, pulsation damped to <1%.

COLUMN COMPARTMENT (heated version): Holds 20 m of 3-mm diameter columns or 5 m of 30-mm columns. Temperature range, ambient to 150°C; control accuracy, ±0.03°C.

INJECTION SYSTEM: Septumless, usable at column pressures to 250 atm; stainless steel and Teflon construction.

DIMENSIONS: 1677 × 700 × 847 mm (67 × 28 × 34 inches)

POWER REQUIREMENTS: 220 V, 50/60 Hz

OPTIONS: (Basic unit is equipped with unheated column compartment and complete solvent system including degassing and single high-pressure pump but does not include detector.)

OPTION 004: Heated column compartment with temperature controller
OPTION 005: Dual solvent system
OPTION 006: Dual column operation (requires opt 005).
OPTION 007: Electronic flow measurement and control for two-solvent system (opt 005).
OPTION 008: Gradient and flow programmer for opt 007.
OPTION 009: Fully automatic preparative operation
OPTION 010: Manual preparative operation

PRICES IN U.S.A.: Model 1010B, $9500 — OPT 004, $1700
OPT 005, $4250 — OPT 006, $1700
OPT 007, $3600 — OPT 008, $2100

MANUFACTURING DIVISION: HP GmbH, GRÖTZINGEN WORKS
Ohmstrasse 6
D-75 Karlsruhe 41
Germany

Hewlett-Packard Company, 1501 Page Mill Road, Palo Alto, California 94304

HEWLETT-PACKARD JOURNAL
OCTOBER 1975 Volume 27 • Number 2

Technical Information from the Laboratories of Hewlett-Packard Company

Hewlett-Packard S.A., CH-1217 Meyrin 2
Geneva, Switzerland
Yokogawa-Hewlett-Packard Ltd., Shibuya-Ku
Tokyo 151 Japan

Editorial Director • Howard L. Roberts
Managing Editor • Richard P. Dolan
Art Director, Photographer • Arvid A. Danielson
Illustrator • Sue M. Perez
Administrative Services, Typography • Anne S. LoPresti
European Production Manager • Michel Foglia

Bulk Rate
U.S. Postage
Paid
Hewlett-Packard
Company

209108GEOR862BLACAAA 192
MR C A BLACKBURN
JOHN HOPKINS UNIVERSITY
APPLIED PHYSICS LAB
8621 GEORGIA AVE
SILVER SPRING MD 20910

CHANGE OF ADDRESS: To change your address or delete your name from our mailing list please send us your old address label (it peels off). Send changes to Hewlett-Packard Journal, 1501 Page Mill Road, Palo Alto, California 94304 U.S.A. Allow 60 days.

© Copr. 1949-1998 Hewlett-Packard Co.