HEWLETT-PACKARD
JOURNAL
TECHNICAL INFORMATION FROM THE -hp- LABORATORIES
Vol. 15, No. 4
BLISHED BY THE HEWLETT-PACKARD COMPANY, 1501 PAGE MILL ROAD, PALO ALTO, CALIFORNIA DECEMBER, 1963

A New Series of Microwave Sweep Oscillators with Flexible Modulation and Leveling

IN microwave work one of the valuable and inherently appealing test instruments is the microwave sweep generator. Such generators can greatly simplify difficult microwave investigations, as discussed in several past articles[1] on sweep-frequency techniques.

A new series of microwave sweep oscillators has now been designed which incorporates a number of new conveniences. These oscillators, especially when used with some of the advanced components recently developed in the –hp– laboratories[2], make microwave sweep methods simpler, more accurate and more meaningful than ever.

SEE ALSO:
High resolution microwave spectrum examination, p. 8.

The new sweepers collectively cover the frequency range from 1 to 40 gigacycles (kilomegacycles). A major factor in their convenience derives from their use of a *p-i-n* diode type modulator in the output circuits[3] of those generators covering the 1 to 12.4 Gc region. This type of modulator permits the generators to be modulated or leveled with virtually no reaction on the generated carrier frequency, since the voltages and currents in the oscillator tube remain constant. As a result, more accurate frequency specifications are possible in all operating functions.

[1] P. D. Lacy and D. E. Wheeler, "A New 8 - 12 kMc Voltage-Tuned Sweep Oscillator for Faster Microwave Evaluations", Hewlett-Packard Journal Vol. 8, No. 6, Feb., 1957.
P. D. Lacy and D. E. Wheeler, "Permanent Record and Oscilloscope Techniques with the Microwave Sweep Oscillator", Hewlett-Packard Journal, Vol. 9, No. 1-2, Sept.-Oct. 1957.

[2] R. B. Riley, "A New Coaxial Crystal Detector with Extremely Flat Frequency Response", Hewlett-Packard Journal, Vol. 15, No. 3, Nov., 1963.

[3] N. J. Kuhn, "A New Microwave Modulator", Hewlett-Packard Journal, Vol. 14, No. 7 - 8, Mar. - Apr., 1963.

Fig. 1. *New –hp– Microwave Sweep Oscillators collectively cover frequency range from 1 to 40 Gc, have many conveniences for sweep-frequency type measurements. Either internal or external "leveling" can be used, but external leveling is to be preferred, as discussed in text.*

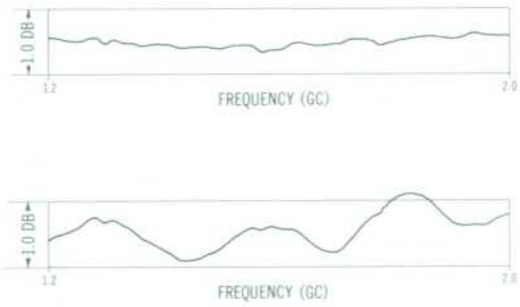

Fig. 2. *Comparison of leveled power incident upon a typical-VSWR load when external leveling is used (upper curve) and when internal leveling is used (lower curve). Equipment arrangements for making curves are shown in Fig. 5 and discussed in text.*

COPYRIGHT 1963 HEWLETT-PACKARD CO.

© Copr. 1949-1998 Hewlett-Packard Co.

Fig. 3(a). *New –hp– Model 692B Sweep Oscillator operates from 2 to 4 Gc. "B" suffix on model number indicates instrument has p-i-n diode type modulator/attenuator in its output circuit for maximum flexibility in modulation and leveling.*

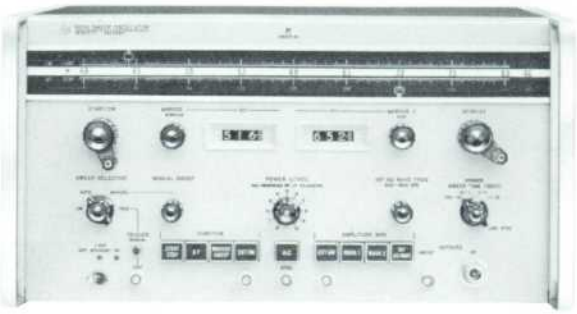

Fig. 3(b). *New –hp– Model 693A Sweep Oscillator operates from 4 to 8 Gc. Both "A" and "B" series of Oscillators have exclusive panel lamp to indicate proper leveling operation.*

For applications where this improved performance is not required, a second series of the generators ("A" series) is provided with a grid-cathode type modulation circuit. The accompanying table shows the frequency ranges and minimum rated power output of the generators in each of the series.

Other conveniences achieved in the new generators include accurately-calibrated wide- and narrow-band sweeps, independent start and stop frequency controls, a manual sweep control for setting end-point and marker frequencies with wavemeter accuracy, and other features described later.

SWEEP ARRANGEMENTS

Fig. 3 shows the front panel of the new sweepers. As indicated by the four FUNCTION push-button switches at the lower left hand center of the panel, there are four types of sweeps with a choice of four sweep modes (SWEEP SELECTOR switch) for each sweep. In the START/STOP function (Fig. 4a), the frequency at which the sweep starts is set by the START/CW control, and the frequency at which the sweep stops by the STOP/ΔF control. Both controls are independently adjustable to any frequency in the entire band and can be set so that the sweep will occur toward a higher or a lower frequency with respect to time.

In the ΔF function, the instrument sweeps across a narrow band centered upon a frequency which is set by the START/CW control, as shown in Fig. 4(b). The width of the band being swept is set by the STOP/ΔF control which is calibrated (lower scale of slide-rule dial) from a maximum sweep width of 10% of the total frequency band to a minimum of approximately 0.1% of the total band. In automatic sweep, then, the instrument sweeps from the CW $-\frac{1}{2}\Delta F$ frequency to the CW $+\frac{1}{2}\Delta F$ frequency.

Two independent markers set on separate digital dials (MARKER I and MARKER II) and direct reading in Gc can be positioned anywhere on the START/STOP or ΔF sweeps. The markers amplitude-modulate the RF output power and are triangular in shape. They are about 2 to 4 db of power in amplitude and approximately 0.1% of the frequency band in width. Since their width is a function of RF frequency and not of time, their resolution is constant regardless of the sweep speed, i.e., of the SWEEP TIME setting.

A third independent sweep arrangement is extremely useful when narrow-band and wide-band measurements are required alternately on the same device. This sweep, called MARKER SWEEP, uses as end points the frequencies set by the MARKER I and MARKER II controls. By use of this sweep arrangement, it is easy to change from the main sweep to a different sweep range without changing the end points of the main sweep. For example, the arrangement enables a wide-band sweep to be set up on the START/STOP sweep, and the portion of this sweep bracketed by markers to be expanded in MARKER SWEEP for higher resolution. Also, one sweep can be set up on START/STOP or ΔF, while a second sweep covering a different part of the generator band can be set up in MARKER SWEEP. In either case one can quickly change from one sweep to another with the push-button switches without resetting end frequencies. MARKER SWEEP has the same accuracy specifications as the main START/STOP sweep.

A fourth sweep arrangement (EXT FM) provides for external sweeping or for control of the RF frequency by external voltages. The center RF frequency is established by the START/CW control, and the full range of the generator can be swept. The

SWEEP GENERATOR RANGES AND DESIGNATIONS

Model No.	Frequency Range	Minimum RF Power Output "A" Series	Minimum RF Power Output "B" Series
691A, 691B	1.0 Gc to 2.0 Gc	100 mw	60 mw
692A, 692B	2.0 Gc to 4.0 Gc	70 mw	40 mw
693A, 693B	4.0 Gc to 8.0 Gc	20 mw	10 mw
694A, 694B	8.0 Gc to 12.4 Gc	20 mw	10 mw
695A	12.4 Gc to 18.0 Gc	10 mw	
696A	18.0 Gc to 26.5 Gc	10 mw	
697A	26.5 Gc to 40.0 Gc	5 mw	

© Copr. 1949-1998 Hewlett-Packard Co.

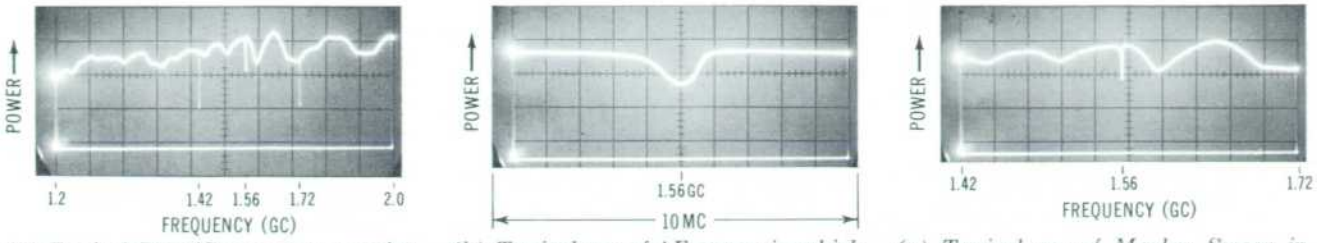

(a) Typical Start/Stop sweep covering a large portion of Oscillator's 1-2 Gc frequency range. Internal markers are here set at 1.42 and 1.72 Gc, and a wavemeter pip is set at 1.56 Gc.

(b) Typical use of ΔF sweep in which RF output is being swept ±5 Mc from 1.56 Gc wavemeter pip in (a).

(c) Typical use of Marker Sweep in which RF output is being swept between two markers at 1.42 and 1.72 Gc in (a).

Fig. 4. *Oscillograms demonstrating three of the sweep arrangements in the new –hp– 690 Series Sweep Oscillators.*

external FM input, located immediately under the EXT FM push button on the panel, is direct-coupled for programming and automatic frequency- control applications and has a bandwidth greater than 20 kc.

SWEEP MODES

The four sweep modes provided by the SWEEP SELECTOR switch at the left of the panel can be used with any of the three internal sweep functions, i.e., with any of the FUNCTION push buttons except EXT FM. Some of these sweep modes are self-explanatory, but there are several associated considerations that have special interest. One is that the generators have been provided with an exclusive MANUAL SWEEP control which can be used to manually sweep the RF frequency between the precise end point settings. This control thus greatly simplifies establishing setups involving X-Y recorders or oscilloscopes. It also facilitates setting the end-point markers with a wavemeter when higher accuracy is desired than is provided by the marker calibrations.

The TRIGGER mode permits the sweep to be initiated either by the panel TRIGGER pushbutton or by an external signal. The TRIGGER pushbutton will also return the RF frequency to its start position before the end of the normal sweep when the pushbutton is depressed. Thus, on slow sweeps, this arrangement is particularly useful when it is desired to terminate the sweep prematurely.

In AUTO sweep the sweep is continuously adjustable from 10 milliseconds to 100 seconds, as determined by the SWEEP TIME controls. An end position on the SWEEP TIME vernier synchronizes the sweep to the power line frequency.

The CW position is normally used when single-frequency output is desired.

When the instrument is sweeping, a SWEEP ON light glows at the top of the panel as a positive indication of sweeping. This is particularly designed for slow sweep applications and is useful to indicate that the sweep has ended when no indicating equipment such as an oscilloscope or recorder is being employed.

SWEEP-RELATED VOLTAGES

In all internal sweep functions two sweep-related voltages are provided for use with external equipment. One is a sawtooth for driving the horizontal system of an X-Y recorder or oscilloscope. The second is a voltage directly related to output frequency regardless of the function or mode used. This voltage is thus useful for triggering voltage-coincident circuits or to give an external voltage indication of the RF frequency.

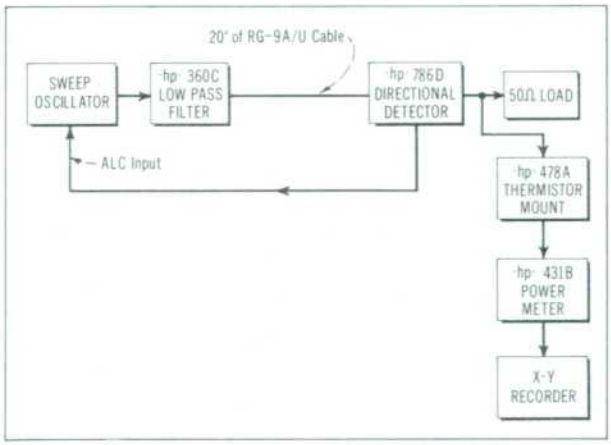

Fig. 5(a). *"External leveling" equipment setup used to make record shown in Fig. 2(a). Use of long cable between generator and load still results in good leveling.*

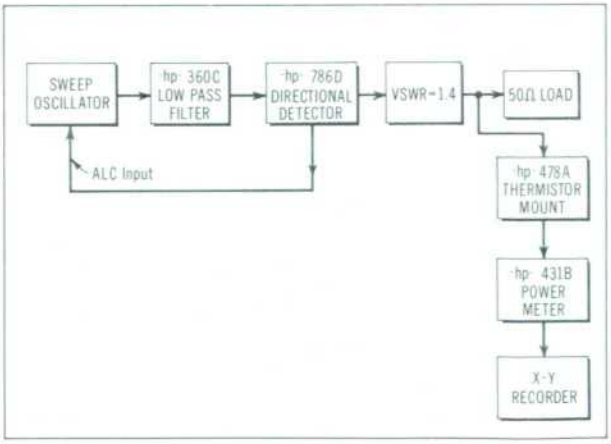

Fig. 5(b). *"Internal leveling" equipment setup used to make record shown in Fig. 2(b). If ALC circuit is internally contained, leveling at 50-ohm load is poorer in typical case where filter, cable, etc., (simulated by VSWR = 1.4 block) is required ahead of load.*

© Copr. 1949-1998 Hewlett-Packard Co.

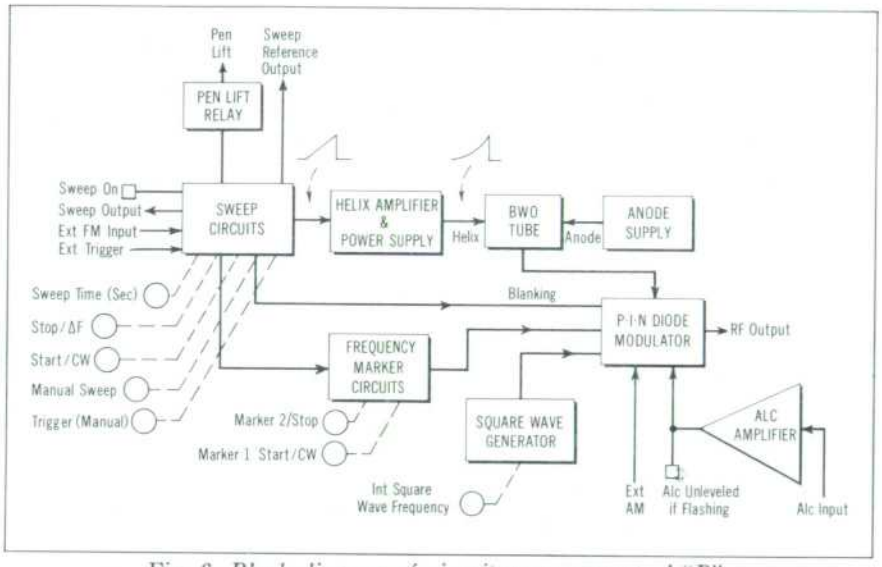

Fig. 6. *Block diagram of circuit arrangement of "B" type of new –hp– 690 Series Sweep Oscillators which uses p-i-n modulator in output circuit.*

POWER LEVELING

To permit leveling the RF output power, a wide-band high-gain amplifier has been included in the instrument. A directional coupler and crystal detector, required to complete the ALC (automatic level control) loop, can be located either inside or outside of the instrument, at the option of the user. There is, however, a decided advantage in externally leveling the RF power at the load. If the power is internally leveled, poor directivity[4] in the sampling coupler, together with mismatch and transmission losses between the sampling coupler and the load, will cause a considerable variation across the frequency band of power incident upon the load. An example of this is shown in Fig. 2 (b) , an X-Y recorder plot of power incident upon a medium-VSWR load as a function of RF frequency. To make this plot, a high-directivity coupler and detector were located at the front panel of a 691B Sweep Oscillator to simulate internal leveling. The block diagram of the equipment arrangement is shown in Fig. 5(b). A feed-through device with a measured maximum VSWR of 1.4 was placed between the sampling coupler and the load. The load, consisting of a 50-ohm termination (VSWR = 1.05) and a 478A Thermistor Mount connected to an –hp– 431B Power Meter (VSWR = 1.2) connected in parallel, provide a load load VSWR of approximately 2.0. The resultant power variation across the frequency band, measured with the power meter and thermistor mount, was approximately 1.0 db. In contrast to this, Fig. 2(a) shows the power incident on the same load when the same sampling coupler is located in an external leveling arrangement, as shown in the block diagram of Fig. 5(a). In this case the power variation across the frequency band was only about .25 db.

In addition to producing flatter power output across the frequency band, external leveling has the convenience of producing good leveling when the sweep oscillator is placed a considerable distance away from the load under test. Any length of cable, or any component, such as a low-pass filter, placed between the sampling coupler and the load will result in a significantly greater power variation rate as a result of mismatch losses and low sampling coupler directivity. In addition, external leveling is particularly advantageous when the measurements are to be made in waveguide using a sweep oscillator with coaxial output. In this case it is almost a necessity to use a waveguide coupler for sampling the incident power, particularly for reflectometer measurements.

The 690 series Sweep Oscillators can also be leveled using in the ALC loop an –hp– Model 431B Power Meter with an –hp– Model 487A Thermistor Mount instead of a crystal detector. In this case the 478A attaches to the sampling arm of the coupler and the "recording output" of the 431B Power Meter connects to the "ALC power meter leveling" input on the rear panel of the sweep oscillator. This provides the sweep oscillator with a calibrated RF output attenuator that is accurate to within ±0.2 db plus coupler variation across the full frequency band. This arrangement is very useful for accurate attenuation and reflectometer measurements.

Internal square wave modulation is provided for both leveled and unleveled operation for use with SWR meters.

The sweep oscillator can be externally amplitude-modulated by applying a signal to the external AM input on the front panel. Approximately 20 volts is required to decrease the RF power a minimum of 30 db

THEORY OF OPERATION

Fig. 6 shows an overall block diagram of the "B" series of sweep oscillator which uses *p-i-n* diode modulation. The RF power output is controlled by the *p-i-n* diode attenuator/modulator, which consists of several diodes spaced symmetrically along a strip transmission line. The attenuation in this device is approximately a linear function of the input bias current. The VSWR of the diode attenuator is less than 1.5 from minimum to 30 db attenuation with a maximum of 2 db insertion loss across the frequency band.

[4] The equivalent source match for the leveled source is a function of this coupler's directivity.

© Copr. 1949-1998 Hewlett-Packard Co.

In unleveled operation, the bias current in the *p-i-n* attenuator is controlled by the parallel combination of the POWER LEVEL control, frequency marker circuit, square wave circuit, and blanking circuit. The arrangement thus allows more than one modulation function to occur at the same time. In internal square-wave operation, for example, one can control the peak power output by adjusting the POWER LEVEL control. In addition, the markers are present in square wave operation and are approximately the same magnitude in db when the POWER LEVEL control setting is changed.

In leveled operation, the POWER LEVEL control and modulation circuits are connected to the reference voltage side of the ALC amplifier. The output of the amplifier is connected directly to the *p-i-n* diode attenuator when the ALC switch is depressed.

The helix of the backward-wave oscillator tube is driven by a high-voltage amplifier and power supply which provides the frequency tuning voltage. The RF output frequency changes linearly as the helix voltage changes exponentially. Hence, a diode shaping-network is located in the feedback network of the amplifier to provide a linear voltage-to-frequency conversion from the input of the helix amplifier to the RF output of the BWO tube. This is shown in more detail in Fig. 7. When V_{in} is zero volts, the overall gain of the helix amplifier is approximately R_a/R_b. As V_{in} increases positively, diodes D1, D2, D3, etc. become forward biased, causing R_b to be shunted by R1, R2, R3, etc. Thus the gain of the helix amplifier is a function of the input sweep voltage. By suitably choosing R1, R2, R3, etc., the tuning characteristic (RF frequency vs helix voltage) of the BWO can be very nearly approximated with a linear input sweep voltage.

The helix amplifier (Fig. 6) is driven by the sweep circuits, which also provide the sweep output, sweep reference output, blanking signal, pen lift relay, and reference input to the frequency marker circuit. The sweep circuits are shown in more detail in Fig. 8. A linear sawtooth voltage is generated by a regenerative Miller integrator, or phantastron, which is clamped at both the top and bottom ends of the sweep for greater frequency-end-point accuracy. The sawtooth voltage is fed to an "inverting amplifier" which generates an inverted sweep of the same magnitude as the phantastron sweep. In START/STOP operation, a portion of the phantastron sweep, determined by the setting of the START/CW control, is added to a portion of the inverted sweep, determined by the setting of the STOP/ΔF control, through equal summing resistors (R_s). The resulting output is also a sawtooth voltage which begins at V_{start}, sweeps to V_{stop}, and then returns to V_{start}. V_{start} is the voltage at the input of the helix amplifier which establishes the start frequency of the BWO tube; similarly, V_{stop} likewise establishes the stop frequency. The output sawtooth is then fed to the helix power supply directly and fed, through a cathode-follower, to the marker circuits and to the rear panel sweep reference jack.

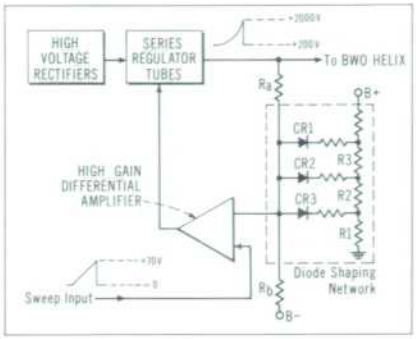

Fig. 7. *Block diagram of helix supply.*

The marker circuits are actuated when the input voltage, determined by a divider between the SWEEP REFERENCE and the MARKER CONTROL voltage, goes through approximately zero volts. The marker voltage is set by the marker control and a resistor connected to the −86-volt supply.

In ΔF operation, the phantas-

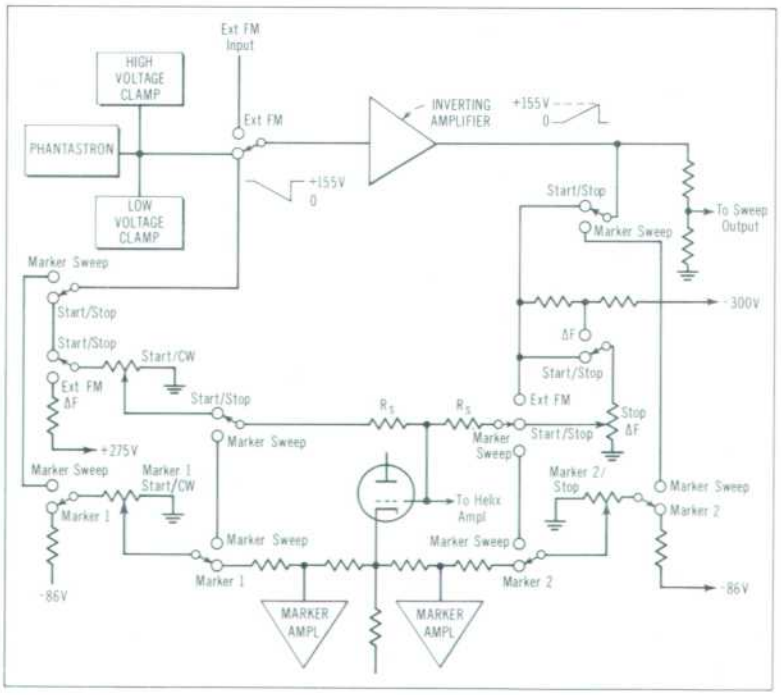

Fig. 8. *Block diagram of sweep circuit arrangement.*

© Copr. 1949-1998 Hewlett-Packard Co.

tron output is fed only to the inverting amplifier. The START/CW control is connected through a resistor to the +275-volt supply and provides the voltage which sets the CW frequency. The inverting amplifier output is divided by a factor of ten and balanced around ground by means of a resistor connected to the −300-volt supply. The STOP/ΔF control then determines the bandwidth of the sweep by setting the sweep voltage being fed to the summing resistors.

Marker sweep operation is obtained merely by exchanging the START/CW and STOP/ΔF controls with the two MARKER controls as shown. The MARKER controls are identical to the START/STOP controls and are initially calibrated in MARKER SWEEP.

In external FM operation, the START/CW control is again connected through a resistor to the +275-volt supply to provide the CW frequency control. The external FM input is fed into the inverting amplifier and directly to the summing resistors. The inverting amplifier has a voltage gain of approximately 4 when connected in the external FM position.

In MANUAL SWEEP, a potentiometer is connected to the sweep circuits in place of the phantastron. A resistor is connected in series with the MANUAL SWEEP control to provide the +155 volts at the top of the control.

GENERAL

The backward-wave oscillator tube in the 690 Series Sweep Oscillators is well protected in the event of power supply malfunctions and from turn-on transients. A time-delay relay prevents the high-voltage helix, collector, and anode power supplies from being actuated until at least one minute after the BWO filament has been on. This allows the electron gun to stabilize before the high voltages are applied, which results in a longer tube life. In addition, an overload relay shuts off the helix, collector, and anode circuits if the helix or anode current becomes excessive. Another relay located in the BWO filament supply, is actuated if the filament voltage becomes excessive in the BWO. The filament relay disconnects the BWO filament and turns off the helix, collector, and anode power supplies.

Another feature, exclusive in the "B" series sweep oscillator, is the "RF" light, which turns on only when the BWO cathode current is within 10% of its rated value. The RF light indicates that rated power is being delivered by the BWO tube and eliminates the necessity of a current-monitoring meter on the front panel. In the "A" series the "RF" light is actuated when helix and anode voltages are applied.

ACKNOWLEDGMENT

The project team for the 690 series sweep oscillators consists of Orthell T. Dennison, Siegfried H. Linkwitz, Maurice L. McGrath, Fred H. Meyers, Eddy L. Miller, R. Fred Rawson and the undersigned. The industrial design was accomplished by Allen E. Inhelder. The author expresses grateful appreciation for many valuable ideas and suggestions from Dr. George W. C. Mathers and Paul C. Ely, Jr.

— Robert L. Dudley

CONDENSED SPECIFICATIONS
—hp—
MODEL 691A AND 691B
MICROWAVE SWEEP OSCILLATORS

FREQUENCY RANGE:* 1 to 2 gc

SWEEP FUNCTIONS:

START-STOP SWEEP: Sweeps from "start" to "stop" frequency setting.
Range: Both settings continuously adjustable over entire frequency range.
End-point Accuracy: ±1% (691A); ±10 mc (691B).

MARKER SWEEP: Sweeps from "Marker 1" to "Marker 2" frequency setting.
Range: Both settings continuously adjusted over entire frequency range.
End-point Accuracy: ±1% (691A); ±10 mc (691B).

ΔF SWEEP: Sweeps from low to high frequency, centered on CW frequency setting.
Width: Continuously adjustable, zero to 100 mc.
Width Accuracy: ±20 mc (691A); ±20% of ΔF being swept or 1 mc, whichever is greater (691B).
Center-frequency Accuracy: ±1% (691A); ±10 mc (691B).

FREQUENCY MARKERS: Two frequency markers, independently adjustable over the full frequency band, internally modulate RF power output.
ACCURACY: ±1% (691A); ±10 mc (691B).
RESOLUTION: Better than 0.05% at any frequency.

CW OPERATION: Single-frequency RF output selected by START-STOP or MARKER 1 control, depending upon sweep function selected.
ACCURACY: ±1% (691A); ±10 mc (691B).
PRESET FREQUENCIES: Start-stop sweep end points and marker frequencies can be used as four preset CW frequencies.

FREQUENCY STABILITY: 0.01%/°C.

RESIDUAL AM: At least 40 db below carrier amplitude.

RESIDUAL FM: Less than 30 kc peak.

SPURIOUS SIGNALS: Harmonics, at least 20 db below CW output; non-harmonics, at least 40 db below CW output.

SWEEP MODE:
AUTO: Sweep recurs automatically.
MANUAL: Front-panel control varies RF frequency between the exact end-frequency settings in any of the above sweep functions.
TRIGGERED: Sweep actuated by front-panel pushbutton or by externally applied signal, −10v peak, >1 μsec pulse width, >0.1 v/sec rise.

FREQUENCY LINEARITY:** ±1% (691A); ±10 mc (691B).

MAXIMUM LEVELED POWER ACROSS THE ENTIRE BAND: At least 60 mw (691A); at least 40 mw (691B).

POWER VARIATION:
EXTERNAL LEVELING: ±0.1 db plus coupler and detector variation (±0.2 db with –hp– 780 series directional detector). Internal dc-coupled leveling amplifier. Power output can be continuously varied over at least a 10-db range with front-panel level set control.
INTERNAL LEVELING (Option 01): ±0.3 db. Power output can be continuously varied over at least a 10-db range with front-panel level set control.
UNLEVELED: 691A: Less than 10 db over entire band. Power can be continuously varied with a front-panel control over at least a 10-db range during sweep operation, over at least a 30-db range during CW operation. 691B: Less than 10 db over entire band. Power can be continuously varied with a front-panel control over at least a 30-db range.

EQUIPMENT SOURCE MATCH:
EXTERNAL LEVELING: Depends upon coupler (1.06 with –hp– 786D Directional Detector).
INTERNAL LEVELING (Option 01): 1.06.
UNLEVELED: Less than 2.5.

OUTPUT IMPEDANCE: 50 ohms, type N female connector.

POWER: 115 or 230 volts ±10%, 50 to 60 cycles. Approximately 350 watts.

PRICE: $3500 (691A); $3800 (691B).

OPTIONS:
01: Internal leveling, add $275.00.
02: RF output on rear panel only, add $15.00.

* Other frequency ranges available upon request.
** Correlation between frequency and either the sweep output or reference output.
Prices f.o.b. factory. Data subject to change without notice.

SPECIFICATIONS FOR OTHER SWEEP OSCILLATORS IN THIS SERIES, NOT INCLUDED HERE BECAUSE OF SPACE LIMITATIONS, ARE AVAILABLE ON REQUEST

© Copr. 1949-1998 Hewlett-Packard Co.

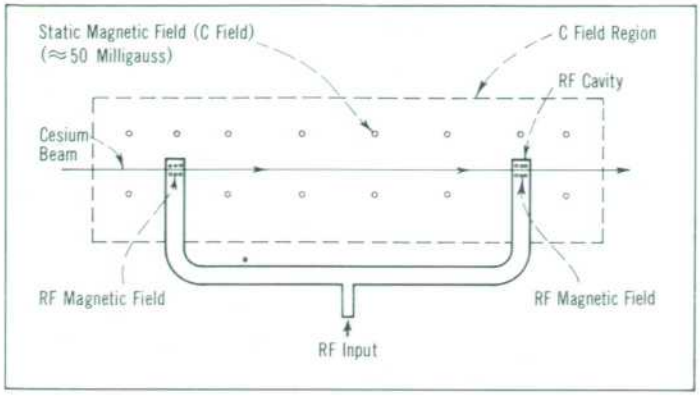

Fig. 5. *RF interaction region of cesium beam tube employs small static magnetic field (C field) which must be homogeneous.*

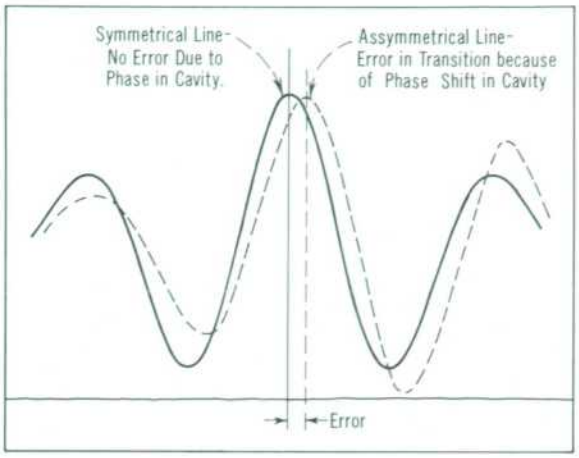

Fig. 6. *Dashed line shows asymmetrical transition resulting if phase difference exists between cavity excitation signals. Solid line is same as Fig. 4.*

The new cesium beam tube, designed expressly for –*hp*– by Varian Associates, uses the Ramsey method of two separated cavities for excitation, as shown in Fig. 5. The beam of selected atoms enters the static magnetic field region, commonly known as the C field, from the left and passes through the cavity ends where the interaction with the microwave field takes place.

The output of the beam tube is a dc current which depends on the frequency of excitation. This current develops a voltage across the 200-megohm input impedance of the –*hp*– 412A DC Voltmeter, which in turn supplies an output voltage to the Y-axis input of the recorder (Fig. 1).

The Synthesizer is used in the *search* mode in which a selected digit of the output frequency can be varied continuously from 0 to 9 by an externally derived sweep voltage. The sweep voltage is also supplied to the X-axis input of the recorder.

A plot of output current versus frequency is shown in Fig. 2. This represents the microwave spectrum of the ground state hyperfine structure of Cs^{133} as observed in a beam tube measured with the system of Fig. 1.

An expanded view of the three central lines is shown in Fig. 3, while Fig. 4 shows the central portion of the center line. The scale changes are made by changing the digit that is swept by the Synthesizer. Much finer (and coarser) resolution is possible with this instrument.

Some magnetic field non-uniformities may be detected easily with such curves. If the fields within the cavity ends differ from the average field between the ends, the interference or rapidly oscillating part of the transition will be shifted from the center of its pedestal. This will be most noticeable on the $-3 - -3$ and $+3 - +3$ transitions. In Fig. 2 this is present to a slight extent showing that the fields in the cavity ends are about 2% lower than the average of the field between. If the fields in the two ends are not the same, the pedestal will widen or even split into two pedestals. No appreciable evidence of this is present in Fig. 2.

Transition frequency is defined as the point of zero slope on the central line in each transition. The desired transition is the central one labeled 0 - 0 in Figs. 2, 3 and 4 which is, to first order, independent of the dc magnetic field. There is, however, a small dependence on the square of the magnetic field (assuming a uniform field). This is given by

$$v - v_o = 427B^2$$

where v is the transition frequency in cps in the field B and v_o is the transition frequency in a zero field (B is in gauss). This shift amounts to slightly more than 1×10^{-10} in a field of 50 milligauss.

The other transitions shown in Fig. 2 are field dependent transitions. They differ in frequency from the 0 - 0 transition by integral multiples of 7.0×10^5 B, the $-3 - -3$ and $+3 - +3$ transitions being removed by approximately 105 kc in a uniform field of 50 milligauss. All these transitions (as well as the 0 - 0 transition) require that the static magnetic field be parallel to the RF magnetic field.

To determine the precise value of the 0 - 0 transition frequency, it is necessary to know the square of the field. This can be computed from the average of the field which in turn can be determined by measuring the frequencies of the microwave field dependent transitions. The square of the average field, however, is the same as the average of the square of the field *only* if the field is uniform. For this reason, a good beam tube should have a uniform C field.

The slight wiggles between the main transitions in Fig. 3 are weak lines caused by $0 - +1$ (or $+1 - 0$) and $-1 - 0$ (or $0 - -1$) transitions which require a static magnetic field perpendicular to the RF magnetic field. Their presence indicates a slight lack of parallelism between the fields.

If these low-level transitions appear with an interference pattern, both cavity ends have non-parallel fields. If the interference pattern does not appear but a pedestal is present, only one end has a non-parallel field. The pedestal is produced by Rabi or single-cavity excitation due to the one cavity end with non-parallel fields.

One other source of error can be checked. If the phase of the microwave cavity is not the same at the two places where the beam goes through, the transition frequency will be in error. Also, the resonance pattern will be asymmetrical[1] as shown in exaggerated fashion in Fig. 6. Examination of Fig. 4 reveals no detectable asymmetry attributed to this cause.

— *Leonard S. Cutler*

[1] J. Holloway et al, "Comparison and Evaluation of Cesium Atomic Beam Frequency Standards," Proc IRE Vol 47 no 10

© Copr. 1949-1998 Hewlett-Packard Co.

EXAMINATION OF THE ATOMIC SPECTRAL LINES OF A CESIUM BEAM TUBE WITH THE -*hp*- FREQUENCY SYNTHESIZER

One of the interesting projects nearing completion in the -hp- laboratories is the development of a Cesium-Beam Frequency Standard.

In the course of such a project, it becomes desirable to investigate the homogeneity of the small magnetic field used in the region wherein occur the transitions of the cesium atoms from one energy state to another. The frequency of the desired transition (9192+ Mc) has a small but significant dependence on the average of the square of this magnetic field. It is easy to measure the average of this field and then to compute its square, but this is the same as the average of the square only if the field is absolutely homogeneous. Therefore, it is necessary to investigate this homogeneity; and this can be done by careful analysis of the microwave spectrum of the beam tube.

In the -hp- laboratories this investigation has been carried out with high resolution by using the -hp- Frequency Synthesizer. This instrument, to be described in an early issue, is a generator that provides known frequencies with very high resolution (.01 cps increments up to 50 Mc), with very high accuracy, and with very high spectral purity.

The brief accompanying discussion describes how the use of this generator has permitted plotting the beam-tube spectrum and gives the results obtained. Even higher resolution was readily possible with the Synthesizer had it been desired.

USEFUL information about the quality of the small static magnetic field within a cesium beam tube is obtained from examination of the cesium microwave spectral lines. To obtain such information in fine detail during the development of a cesium beam frequency standard at Hewlett-Packard, these lines were plotted with the aid of the -*hp*- 5100A/5110A Frequency Synthesizer. The spectrally-pure, precisely-controlled frequency output of this instrument enhanced the accuracy of the measurements.

The system for making the plots is shown in Fig. 1. The frequency translator adds the Synthesizer output to a fixed harmonic of the stable 5 Mc source to provide a pure excitation frequency at 9192+ Mc. This frequency is varied through a narrow range by the Synthesizer.

(Concluded on p. 7)

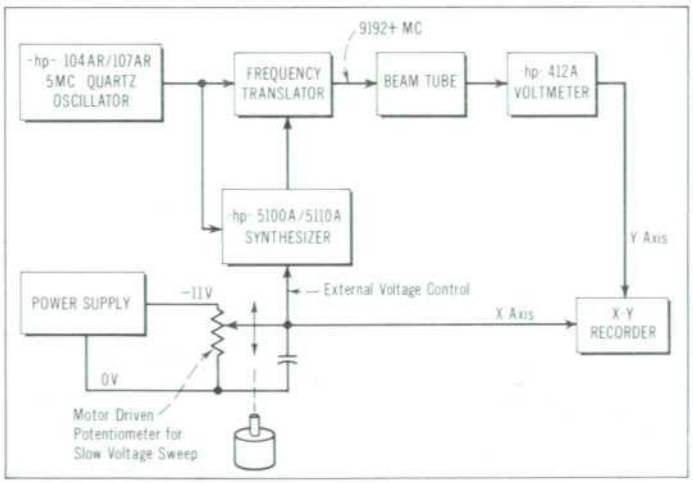

Fig. 1. *System for plotting microwave spectral lines of cesium.*

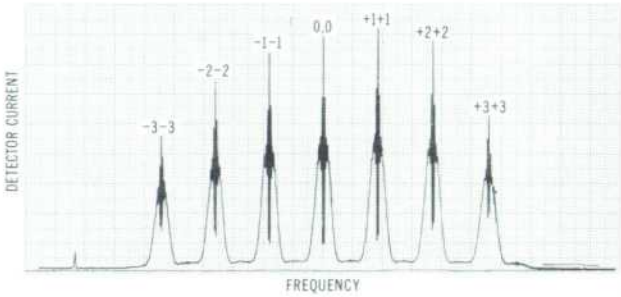

Fig. 2. *Microwave spectral lines of Cs^{133} as plotted with system shown in Fig. 1. Frequency of 0, 0 transition for a zero magnetic field is 9192.631770 Mc (defined in Ephemeris time).*

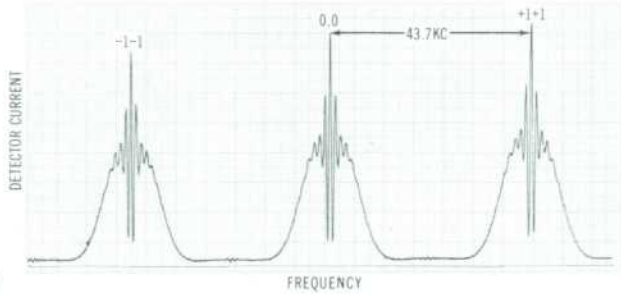

Fig. 3. *Plot of central lines of Fig. 2 as expanded by changing push-button setting of synthesizer search frequency by one decimal place and by adjustment of recorder horizontal gain.*

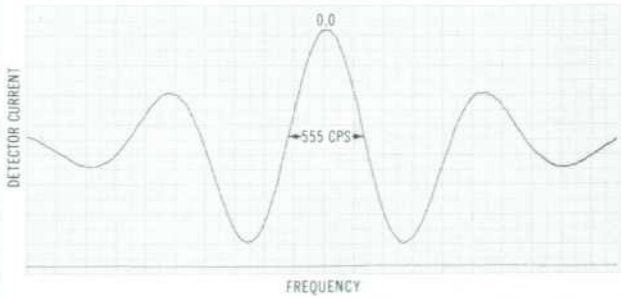

Fig. 4. *Central transition of Figs. 2 and 3 on greatly expanded scale also obtained by changing search frequency setting of synthesizer by one decimal place and adjustment of recorder horizontal gain.*

© Copr. 1949-1998 Hewlett-Packard Co.