HEWLETT-PACKARD
JOURNAL
TECHNICAL INFORMATION FROM THE -hp- LABORATORIES
Vol. 15, No. 3
PUBLISHED BY THE HEWLETT-PACKARD COMPANY, 1501 PAGE MILL ROAD, PALO ALTO, CALIFORNIA NOVEMBER, 1963

A New Multi-Purpose Digital Voltmeter

THE accuracy and speed with which digital voltmeters make dc voltage measurements have made these instruments extremely useful in a variety of applications. One of their attractive properties is that the digital readout has greater resolution than a meter and is less likely to be misread, particularly by unskilled personnel. Also, data in digital form may be processed or stored without loss of accuracy, a feature which has made digital voltmeters the basic element in automatic data acquisition systems.

SEE ALSO:
Extremely flat response detector, p. 8

The high precision, i.e. resolution, attainable with a digital display is of particular interest to many users. Precision of readability by itself, however, is not a guarantee of measurement accuracy. There is an analog device behind every digital voltmeter display, and the voltmeter can be no more accurate than its associated analog circuitry.

With this fact in mind, a new digital voltmeter has been designed whose accuracy has been conservatively specified to be within ±0.05% of reading ±1 count. This accuracy holds for long periods of time under a wide range of environmental conditions.

Actually, the calibration of the new voltmeter is held at the factory within ±0.01% of reading ±1 count, the maximum precision obtainable with

Fig. 1. *Front panel plug-ins adapt Model 3440A Digital Voltmeter to manual or automatic ranging for bench use or remote ranging for systems use. Unit shown in center foreground is working with -hp- Model 562A Printer to record voltage/temperature characteristics of circuit operating in environmental chamber. New voltmeter measures dc voltages to an accuracy better than 0.05% of reading ±1 count.*

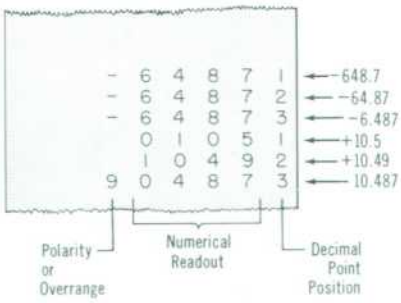

Fig. 2. *Printed tape sample shows voltmeter output recorded by -hp- Model 562A Printer. Number 9 in polarity column indicates overrange; blank means plus. Numeral in decimal point column is negative exponent of ×10 multiplier. Numbers shown at right interpret recorded values.*

COPYRIGHT 1963 HEWLETT-PACKARD CO.

© Copr. 1949-1998 Hewlett-Packard Co.

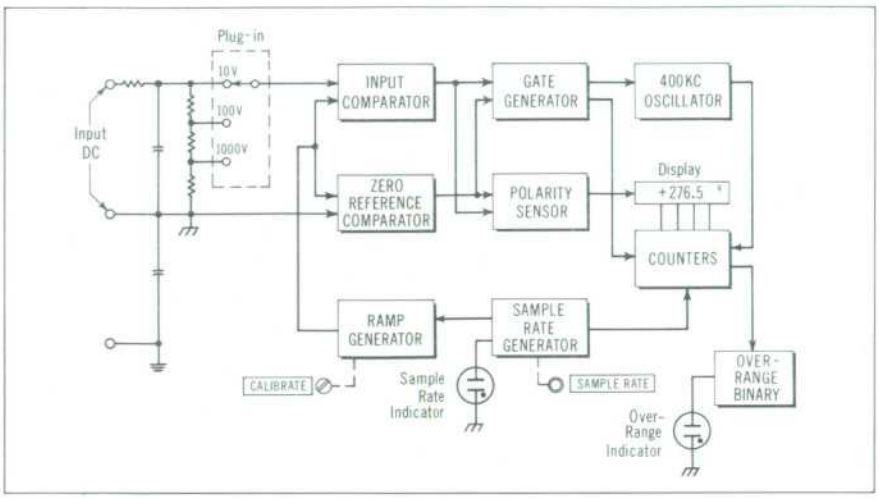

Fig. 3. *Block diagram of –hp– 3440A Digital Voltmeter.*

the 4-digit readout. The formal specification of accuracy is relaxed by a factor of five to 0.05% to allow for aging of the range attenuator and zener-diode reference and also to permit use of the voltmeter in a variety of environmental conditions. Any drift associated with the analog-to-digital conversion system does not enter into the accuracy specification since it can be quickly checked and calibrated out at the front panel by use of the precision internal reference voltage.

One source of inaccuracies, of particular concern with high-resolution voltmeters, is the impedance of the voltage source being measured. Since the voltmeter's input impedance has been designed to be constant regardless of range or sample rate, the error caused by the 10.2 megohm dc input impedance of the Model 3440A Voltmeter is predictable at approximately 0.01% per 1000 ohms in circuits with impedances higher than 1000 ohms. The voltmeter input impedance has negligible effect on the voltage of a source that has an impedance of less than 1000 ohms.

PLUG-IN ADAPTABILITY

The voltmeter is designed for use with front-panel plug-ins, thus permitting the basic instrument to be adapted to a large variety of applications. Presently available plug-ins include a basic manual ranging unit, providing ranges of 10, 100, and 1000 volts full scale, and an automatic ranging unit which can be remotely controlled. Plug-ins under development include a high gain preamplifier, allowing 100 millivolts full scale on the most sensitive range, and a multi-meter plug-in which will measure current and resistance in addition to voltage.

READOUT SYSTEM

The 4-digit display uses close-spaced, rectangular Nixie® tubes in addition to polarity, decimal point, and function indicators. A display storage feature, as on the –hp– solid-state counters, retains the reading from the previous sample while a new measurement is being made; the displayed numerals therefore remain steady, changing only if the new reading differs from the previous one.

The measurement (sample) rate may be varied by a front panel control from greater than 5 per second to less than 1 per 5 seconds. The voltmeter makes accurate measurements quickly, achieving the rated 0.05% accuracy within 450 milliseconds after a step change of input voltage. A HOLD position on the SAMPLE RATE control retains any given measurement on display indefinitely. The HOLD position also enables a measurement to be initiated by external control.

The voltmeter makes measurements to 5% above full scale with full accuracy on any range, thus obtaining 5-digit resolution just above the decade range switching points. In effect, this amounts to a range overlap. An overrange measurement is indicated as such by the illuminated OVERRANGE indicator on the front panel.

Full overload protection to 1100 volts is provided on all ranges. The input circuit is floating and can

Fig. 4. *Model 3440A Digital Voltmeter uses closely-spaced rectangular Nixie® tubes to achieve numerical display with readable span. Readout system has display storage which retains previous reading while new measurement cycle is in process, insuring steady, flickerless display that changes only when input voltage changes. Front panel calibrate button furnishes quick operational check of voltmeter accuracy.*

© Copr. 1949-1998 Hewlett-Packard Co.

measure voltage sources that are up to ±400 volts off ground.

The instrument is completely transistorized with no electrical-mechanical moving parts other than reed relays for attenuator switching and two non-signal relays in the automatic ranging plug-in.

DESIGN APPROACH

The Model 3440A Digital Voltmeter uses a voltage-to-time-interval conversion system as outlined in Fig. 3. The time interval is evaluated by digital counter techniques to obtain the digital display.

The unknown voltage, appropriately attenuated, is applied to a comparator to which a linearly-decreasing ramp is also applied. When the ramp voltage becomes equal to the unknown voltage, a coincidence pulse is generated, as shown by the timing diagram in Fig. 5. The ramp voltage is also applied to a zero reference comparator which has signal ground for its other input. Again, when the ramp voltage becomes equal to signal ground, a coincidence pulse is generated by this comparator. The time difference between these two pulses is a direct analog of the difference between the unknown signal voltage and signal ground.

The time difference is converted to digital form by the counting of clock pulses. The first-occurring comparator coincidence pulse opens a count gate, enabling the counters to operate, and the second pulse closes the gate to terminate the count. The first comparator pulse also starts a Colpitts oscillator which provides the clock pulses.

By appropriate choice of ramp slope (400 v/sec) and clock pulse repetition rate (400 kc) the total count displayed corresponds to input millivolts. Range switching operates an input attenuator and places the decimal point so that the display reads directly in volts.

Input polarity is determined by a circuit that detects which comparator pulse occurred last and displays a plus or minus sign accordingly. When readings are taken above full scale, an overflow pulse from the decade counters (the 10,000th pulse counted) operates an overrange binary which in turn illuminates the OVERRANGE indicator.

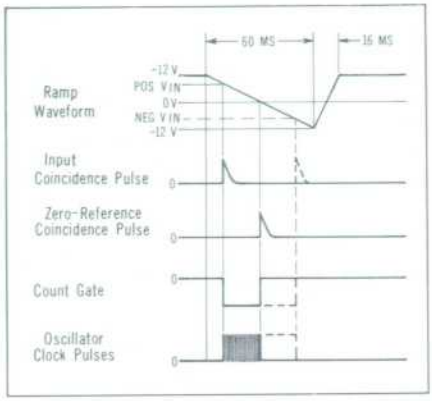

Fig. 5. *Timing diagram of 3440A Digital Voltmeter. Solid lines show operation when input voltage is positive and dotted lines show operation with negative input voltage. Polarity-sensing circuit determines whether input coincidence pulse or zero-reference coincidence pulse occurs last, and switches plus-minus Nixie indicator accordingly.*

THE VOLTAGE COMPARATORS

The all-solid-state voltage comparators of the new digital voltmeter are of special interest. The basic design requirements for the comparator circuits were: sensing level considerably less than one mil-

VOLTMETER PLUG-INS

MODEL 3441A

MANUAL SELECTOR PLUG-IN

The two plug-in units presently available for the 3440A Digital Voltmeter are the 3441A Manual Range Selector and the 3442A Automatic Range Selector. In addition to range selection, both plug-ins provide the decimal point indication for the voltmeter and gather the necessary polarity, overrange, and decimal information for the digital recorder input.

Choice of range with the Manual Range Selector is made from the plug-in front panel by a switch which selects the 10 volt, 100 volt, or 1000 volt range. Since the new digital voltmeter has an overrange indicator and cannot be damaged by overloads to 1100 volts on any range, the correct range for an unknown voltage is found easily.

The Automatic Range Selector plug-in uses signals and control voltages from the digital voltmeter to place the instrument on the proper voltage range automatically. If the selected range is too low, the OVERRANGE signal immediately causes an automatic uprange. If the range is too high (no count registered in the leading significant digit), the plug-in downranges. A built-in hysteresis, however, prevents downranging unless the voltage drops to less than 90% of full scale of the lower range. This prevents slight input voltage perturbations or attenuator tolerance overlap from causing erratic range shifting at the decade range change points.

MODEL 3442A

AUTOMATIC RANGE SELECTOR PLUG-IN

As an aid in general purpose measurements, the sample rate is automatically increased to the maximum rate when a range change is initiated. This speed-up lasts for less than one second but insures that the voltmeter quickly switches to the correct range and accurately displays the input voltage without delay.

The Automatic Range Selector also has manual range selection to allow use of the new digital voltmeter's overrange capabilities.

© Copr. 1949-1998 Hewlett-Packard Co.

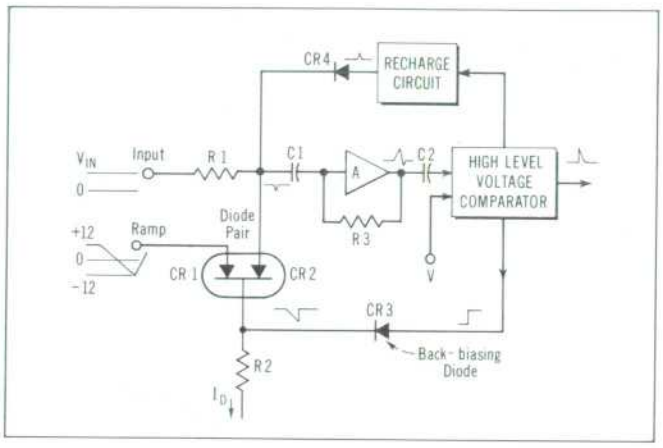

Fig. 6. *Input voltage comparator circuit. Zero reference comparator circuit is similar except that circuit ground is used as input voltage.*

livolt (i.e., circuit noise and equivalent time jitter approximately 100 microvolts); high input impedance (in excess of 10,000 megohms); low leakage currents (less than one nanoampere); and good temperature stability (less than one millivolt drift in sensing level from 0°C to 55°C).

These needs were met by an unusual voltage comparator. As shown in Fig. 6, a matched pair of diodes (CR1 and CR2) with common cathodes is ac-coupled to a gain-stable current amplifier which in turn is coupled to a high-level voltage comparator. The anode of diode CR1 is connected to the source of the ramp voltage while the other anode (CR2) is connected to the unknown input signal voltage. A constant current is supplied to the common cathodes. The ramp, originating at a potential greater than full scale input voltage, initially forward-biases diode CR1, thereby reverse-biasing diode CR2.

When the linearly decreasing ramp voltage approaches the input voltage, diode CR2 begins to conduct. This current change is capacitively-coupled to the current amplifier and converted to an equivalent voltage. When this voltage reaches a fixed level, which was chosen to correspond to a current in CR2 equal to that being drawn by ramp diode CR1, it triggers the high-level voltage comparator, a bistable circuit. The diode pair immediately is reverse-biased through diode CR3 so that no further energy is removed from the input circuit. Also, a small amount of charge is transferred back through CR4 into input capacitor C1 to replace the charge (about 500 pico-coulombs) which was removed during the act of comparison. This removes any loading of the input attenuator circuit by the comparator and eliminates offsets caused by source impedance variations.

RAMP LINEARITY

The initial calibration accuracy of 0.01% of reading ±one count includes allowances for the input attenuator, comparator drift, and ramp linearity. (Oscillator frequency drift and ramp slope variations do not limit rated instrument accuracy since these may be corrected simultaneously by front panel calibration against the internal reference.) To permit this accuracy, the ramp must be extremely linear.

The ramp is generated by a bootstrap circuit which has high loop gain and feedback to the internal ramp amplifier. The feedback circuit ensures that the ramp capacitor charging current is constant for the duration of the ramp and that variations in transistor parameters have no effect.

Extreme care has been exercised in selection of the components that determine the ramp slope to ensure ramp stability with respect to time and temperature. The temperature coefficient of ramp reference zener diode CR6 matches that of the base-emitter junction of ramp generator input transistor Q1. Likewise, ramp charging resistor R5 has a positive temperature coefficient which cancels the negative temperature coefficient of precision polystyrene ramp capacitor C3.

THE GATED OSCILLATOR

One of the fundamental accuracy limits of any digital system is the resolution of the least significant digit. Since the time interval being measured in the new digital voltmeter is between two pulses which occur at arbitrary points in time, clock pulse ambiguities can exist around both the first and second comparator pulses.

To reduce this effect, the clock pulse oscillator is turned on by the first pulse so that the clock pulses are synchronized with respect to the first comparator pulse. This is made possible by holding the Colpitts LC oscillator with tank capacitors fully charged but with no current in the tank inductance. The current path through the inductance is closed by saturation of a series transistor, thereby starting the oscillator immediately at full amplitude from a predicted state.

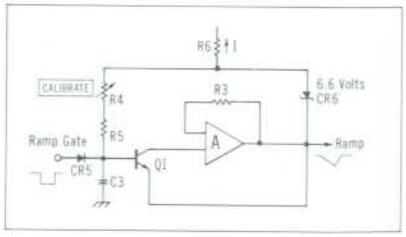

Fig. 7. *Ramp generator circuit achieves exceptional linearity with feedback amplifier having input impedance of nearly 1,000 megohms.*

© Copr. 1949-1998 Hewlett-Packard Co.

RESOLUTION AND ACCURACY

The numerical resolution on the lowest range (10 v) is 1 millivolt. Actually, the instrument may be calibrated to within a fraction of a millivolt by observing the voltage levels at which the least significant digit flickers to the next higher or lower number. The flicker, or uncertainty, turns out to be about 0.3 microsecond of ramp or 100 microvolts of the measured voltage.

The specification of accuracy allows for aging and for the temperature coefficients of the reference zener diode and the input range resistors. The nine-volt reference diode has a maximum temperature coefficient of ±0.001% per degree C over the instrument operational temperature range. A precision voltage divider across the diode is adjusted at the factory to provide a —8.000 volt input reference for calibrating the voltmeter.

The input range resistors are adjusted at the factory to better than 0.005% accuracy. These have a maximum temperature coefficient of ±5 ppm per degree and a long term stability of ±100 ppm per year. By proper readjustment of the trimmers associated with the reference diode and range resistors, the instrument may be reset to its original factory accuracy of ±0.01% of reading ±1 count in the event of any detectable long term resistance drift.

DIGITAL OR ANALOG RECORDING

The new voltmeter is designed to drive directly the *–hp–* Model 562A Digital Recorder or Model 580A Digital-Analog Converter. Each of the four digits, together with polarity, decimal, and overrange information, is represented by four-line, binary-coded decimal voltages in the 1-2-2*-4 weighted code, available at a rear-panel connector.

The voltmeter-recorder combination operates at a sampling rate determined by the voltmeter SAMPLE RATE control, or by an external trigger when the SAMPLE RATE control is in the HOLD position. Printer action is initiated by a print command pulse from the sample rate multivibrator. When the 3442A Automatic Range Selector plug-in unit is being used, the print command pulse is held off for approximately 500 ms after the start of an automatic range change. This prevents the recorder from printing erroneous voltage information while the voltmeter is settling down on a new range.

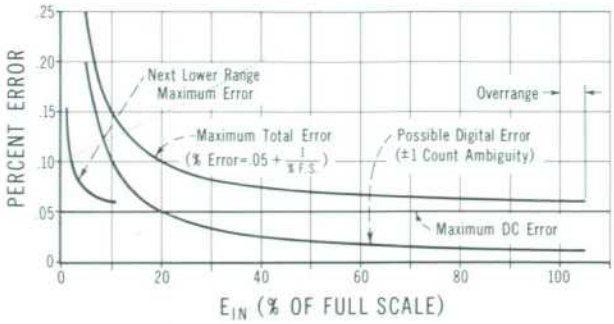

Fig. 8. *Specified accuracy limits of Model 3440A Digital Voltmeter show maximum possible errors. Digital error arises from finite resolution of digital readout and vanishes whenever digitized value coincides exactly with actual input voltage.*

REMOTE CONTROL

A 36-pin remote control jack on the rear panel of the new voltmeter permits a range change on remote command when the voltmeter is used with the 3442A Automatic Range Selector plug-in unit. The desired range may be selected either by a contact closure or by a transistor switch, enabling the new voltmeter to be used in digital data acquisition systems.

ACKNOWLEDGMENTS

The design group for the new voltmeter included Donald E. Barkley, Charles W. Near, and project leader David S. Cochran. Paul G. Baird and Peter Kertesz developed the plug-ins and the mechanical design was by Tor Larsen.

—David S. Cochran and Charles W. Near

SPECIFICATIONS

–hp–

MODEL 3440A

DC DIGITAL VOLTMETER

Voltage Range: 4-digit presentation of 9.999, 99.99 and 999.9 volts full scale; 5% overrange capability with indicator. Full overload protection on all ranges.

Accuracy: ±0.05% of reading ±1 digit with line voltage variations of ±10% from nominal throughout temperature range between +15°C and +40°C; ±0.1% of reading ±1 digit for temperature range of 0°C to +55°C.

Sample Rate: Greater than 5 samples per second to less than 1 sample per 5 seconds with display storage between samples. HOLD position displays single measurement indefinitely or permits external initiation of samples by application of +10 volt pulse.

Range Selection:
WITH 3441A: Manual.
WITH 3442A: Manual, automatic, and programmed. Range Change Speed — Automatic: achieves accurate reading within 500 ms after new voltage is applied. Programmed: changes range within 40 ms.

Input Impedance: 10.2 megohms (dc) on all ranges.

Input Filter:
AC REJECTION: 30 db at 60 cps increasing at 12 db per octave.
RESPONSE TIME: Less than 450 ms to a step input.

Polarity: Automatic indication.

DC Isolation: Signal pair may be operated up to 400 volts dc from chassis ground.

Electrical Readout: 6 columns consisting of 4 digits, polarity, and decimal position; 4-line BCD with 1-2-2*-4 weighting. "0" is —24 volts and "1" is —1 volt; 120 kΩ output impedance.

Print Command: +25 volt peak pulse at completion of each sample except during automatic range change (including short settling time). 100 ohm source impedance ac-coupled.

Power: 115 or 230 volts ±10%, 50 to 1000 cps; approximately 20 watts.

Weight (including 3441A Manual plug-in): 19 lbs. net; shipping weight 24 lbs.

Price: 3440A Digital Voltmeter (requires plug-in): $1,160.00.
3441A Manual Selector Unit: $40.00.
3442A Automatic Range Selector: $135.00.

Prices f.o.b. factory
Data subject to change without notice

© Copr. 1949-1998 Hewlett-Packard Co.

FLAT-RESPONSE DETECTOR

(continued from p. 8)

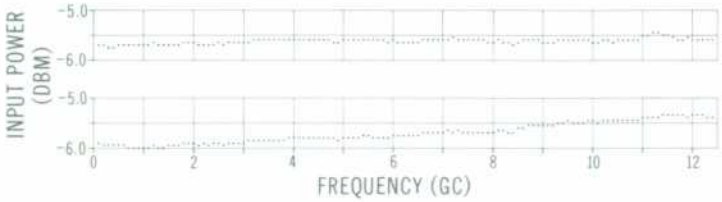

Fig. 4. *Frequency response of two typical Model 423A Crystal Detectors. Ordinate represents RF power required to produce 100 millivolts output.*

Detector is a result of Hewlett-Packard's ability to integrate semiconductor technology and microwave technique in solving measurement problems. The crystal diode itself was developed by –*hp*– to meet performance goals unattainable with presently available diodes. A point contact microwave diode alone is an extremely poor match to 50 ohm transmission line. The usual technique for reducing the VSWR of broadband crystal detector mounts is to place shunt and series resistors of about 70 ohms each ahead of the diode.

By contrast this problem is solved in the new detector by placing a 50-ohm resistive film on the dielectric cyclinder which constitutes the case of the diode. Thus, the physical separation between rectifying contact and shunt resistor is minimized. The 50-ohm film resistor is a good match to coaxial line, and the crystal diode is essentially a high impedance shunting the resistor.

The RF bypass capacitor across the output is an integral part of the crystal capsule. The bypass capacitance is purposely kept small (about 10 pf) so that the rise and fall times of the detected envelopes of fast RF pulses would not be unnecessarily degraded. If the RF bypassing is insufficient in a given situation, an external low pass filter can be used.

Another factor involved in the design of a crystal detector for leveling applications is the output resistance of the detector. The RC time constant formed by the output resistance and the bypass plus output cable capacitances limits the response to fast power fluctuations. The output resistance of the Model 423A is less than 15,000 ohms.

The crystal capsule can be readily replaced in the field. The capsule includes the 50-ohm film resistor and RF bypass capacitor as well as the crystal diode itself. The critical components are supplied as a unit, the mount playing only a minor role in determining frequency response and VSWR.

The Model 423A complements the new line of –*hp*– sweep oscillators. Reflection coefficient measurements and such measurements as coupling and directivity of directional couplers can readily be made on a swept-frequency basis and displayed on an oscilloscope for instant analysis of the effects of changes and adjustments. One Model 423A is used to level the sweep oscillator (with its internal amplifier) and a second Model 423A is used to detect the signal to be measured.

PULSE RESPONSE

The Model 423A is an ideal detector for displaying the envelopes of fast RF pulses on an oscilloscope. The technique is to shunt the output of the detector with a resistor (usually 50 to 1000 ohms) to speed up the response to pulses. The object is to make the RC time constant (shunt resistance times the sum of RF bypass, cable and oscilloscope input capacitances) short compared with the pulse-envelope buildup and decay times. Of course, output voltage is considerably reduced by heavy loading; consequently, a compromise has to be effected between output voltage and response time. For example, with short cables, an output load resistance of 50 ohms and a peak pulse

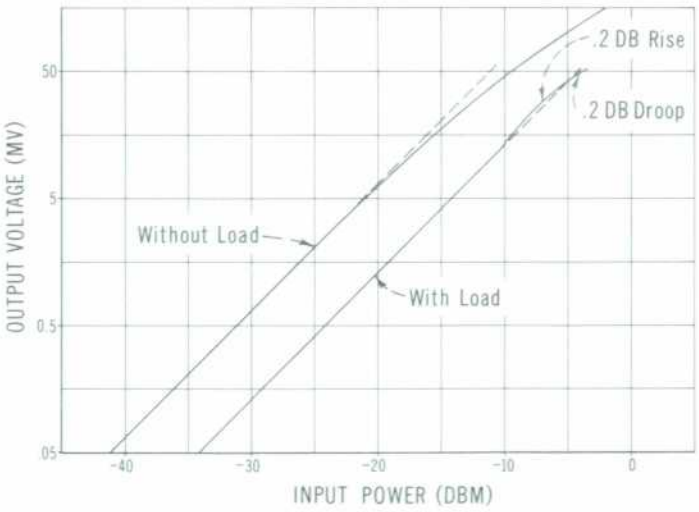

Fig. 5. *Square-law response of typical Model 423A Detector with and without load. Load indicated is –hp– 11523A matched video load.*

© Copr. 1949-1998 Hewlett-Packard Co.

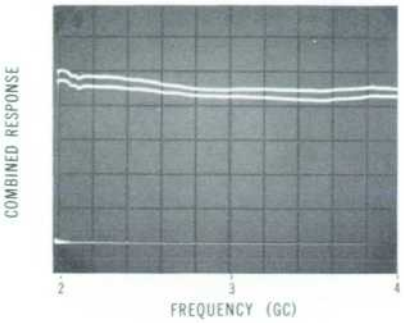

Fig. 6. *Frequency response of one Model 423A when another Model 423A was used to level the sweeper. Second trace has Model 423A's reversed to emphasize response differences between units. This randomly-selected pair is matched within 0.1 db. Vertical scale is 50 mv/div.*

power of 50 mw, pulse buildup and decay times down to about 5 nanoseconds can be measured with oscilloscopes having sensitivities of 50 mv/cm or better.

The Model 423A is normally supplied with negative output polarity and without a video load. Positive output polarity can be supplied as option 03. If square-law behavior is needed over the widest possible dynamic range, then option 02, which includes a selected video load resistor, should be specified.

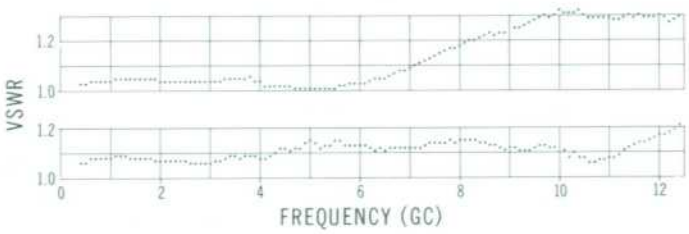

Fig. 7. *Measured VSWR of two typical –hp– Model 423A Crystal Detectors.*

ACKNOWLEDGMENT

The writer wishes to acknowledge the assistance of Harold E. Hiner, who made many valuable contributions to this project.

—Russell B. Riley

SPECIFICATIONS

—hp—

MODEL 423A CRYSTAL DETECTOR

Frequency Range: 10 Mc to 12.4 Gc.

Frequency Response: Within ±0.5 db from 10Mc to 12.4 Gc as read on an –hp– Model 416 Ratio Meter or –hp– Model 415 SWR Meter calibrated for square law detectors.

SWR: <1.2 from 10 Mc to 4.5 Gc.
<1.35 from 4.5 to 7 Gc.
<1.5 from 7 to 12.4 Gc.

Sensitivity:
HIGH LEVEL: <0.35 mw produces 100 mv output.
LOW LEVEL: >0.4 mv dc/μw cw.

Output Impedance: 15 k maximum, shunted by 10 pf.

Detector Element: Supplied.

Maximum Input: 100 mw.

Noise: <200 μv pk-pk, with cw power applied to produce 100 mv output.

Output Polarity: Negative is standard; see Option 03 below.

Input Connector: Type N male.

Output Connector: BNC female.

Dimensions: ⅞ in. (2.2 cm) diameter, 2½ in. (6.4 cm) long.

Weight: Net, 4 oz. (110 gm).

Price: $125.00.

Option 02: Furnished with –hp– 11523A video load for optimum square law characteristics, < ± 0.5 db variation from square law from low level up to 50 mv dc output. (75 k min. load, cw input.) 11523A length, 2 9/16 in. (6.5 cm). Add $20.00.

Option 03: Positive polarity output. No extra charge. (Replacement crystal: –hp– 00423-801, $75.00.)

Prices f.o.b. factory
Data subject to change without notice

APPENDIX

Tangential Sensitivity of the Model 423A Detector

While not designed for maximum tangential sensitivity (the 50-ohm RF resistor actually absorbs most of the incident power), there may still be applications requiring a well-matched, broadband detector where a knowledge of the tangential sensitivity of the new Model 423A Detector would be useful. At low levels without bias the crystal diode generates no excess noise.* Its noise is simply that of a resistor equal in value to the output resistance of the diode. Thus the signal-to-noise ratio at the output of the video amplifier is given by

$$\frac{S}{N} = \frac{\text{Signal power available from source}}{\text{Noise power available from source}} \times \frac{1}{F}$$

$$= \frac{\dfrac{(\gamma P)^2}{4 R_d}}{kTBF}$$

where γ is open-circuit voltage sensitivity, P is RF power, R_d is crystal diode output resistance, k is Boltzmann's constant, T is absolute temperature, B is bandwidth of the video amplifier and F is the noise figure (expressed as a ratio) of the video amplifier when connected to a source with resistance equal to R_d. The RF power P_1 required for a signal-to-noise ratio of unity is then

$$P_1 = \frac{2}{\gamma} \sqrt{kTBR_dF}$$

With a typical Model 423A ($\gamma = 0.5$ mv/μw = 500 volts/watt, $R_d = 5000$ ohms) and a video amplifier with a bandwidth of 1 megacycle and noise figure of 3 db (F = 2), we have

$$P_1 = \frac{2}{500} \sqrt{(1.38 \times 10^{-23})(300)(10^6)(5000)(2)}$$

$$\cong 2.5 \times 10^{-8} \text{ watts} = 2.5 \times 10^{-5} \text{ milliwatts}$$

$$\cong -46 \text{ dbm}$$

Tangential sensitivity, which is often taken to be an RF power level 4 db more than that required for a signal-to-noise ratio of unity, is then —42 dbm. A bandwidth of one megacycle has been assumed for this example. Much weaker signals can be detected with narrow-band amplifiers of the kind used in VSWR and reflectometer measurements.

* Since the output impedance of the 423A is relatively low compared with other point-contact silicon diodes, bias is usually not required.

© Copr. 1949-1998 Hewlett-Packard Co.

A NEW COAXIAL CRYSTAL DETECTOR WITH EXTREMELY FLAT FREQUENCY RESPONSE

Fig 1. *New –hp– Model 423A Crystal Detector has so constant a frequency response over the 1240:1 range from 10 megacycles to 12.4 gigacycles that any two of the Detectors constitute a well-matched pair. Illustration also shows optional video load which is selected for optimum Detector square-law response.*

A NEW coaxial crystal detector has been developed by the –hp– laboratories for such applications as leveling microwave sources and measuring reflection coefficients, as well as other uses where improved standing wave ratio and flatness of frequency response are needed. The state of the art has also been advanced with respect to sensitivity for broadband detectors.

The frequency range of the new detector is 10 Mc to 12.4 Gc (kMc) with less than ±0.5 db variation in sensitivity over the entire range. The sensitivity is a slowly varying function of frequency with little "fine structure," as shown in Fig. 4. Over narrower bandwidths (for example, over 4 to 8 Gc, or over X-band) the performance is typically much better than ±0.5 db. Thus, any two crystal detectors can serve as a "matched pair" for reflectometer and other similar applications. The standing wave ratio is less than 1.5 up to 12.4 Gc and is even less at lower frequencies (see specifications).

The crystal detector is also available with an external load resistor (–hp– 11523A) selected for maximum dynamic range with good square-law response (Fig. 5). When highest sensitivity is needed, the detector is simply operated without the load resistor. Without the load, the sensitivity is nearly three times better than previously available broadband crystal detectors.

The detector is also unusual in that a noise output specification has been added to the others normally listed for broadband crystal detectors. Low noise is important, for example, when a crystal detector is used in a closed-loop system to level the power output of an RF source, since a noisy crystal causes the leveled RF amplitude to be "noisy." The –hp– production noise test simulates operation of the detector as a leveling device. The noise voltage is approximately proportional to output voltage.

CONSTRUCTION

The advance in performance represented by the Model 423A Crystal

(continued inside on p. 6)

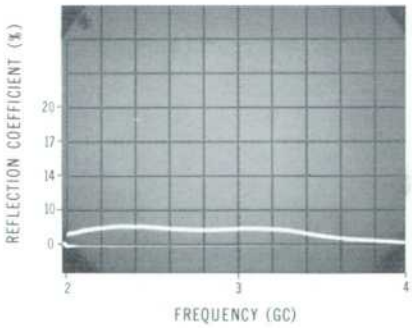

Fig. 3(a). *Reflection coefficient of typical Model 423A Detector. Measurement was made using setup of Fig. 2. Maximum value indicated is 7.5%.*

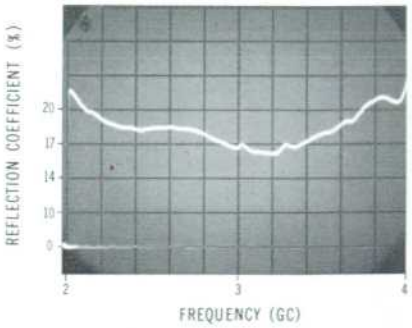

Fig. 3(b). *Reflection coefficient of broadband detector typical of the state of the art prior to development of Model 423A. Maximum value indicated exceeds 20%.*

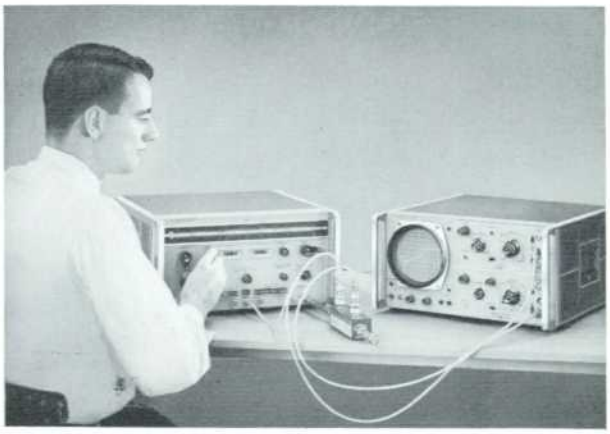

Fig. 2. *Two Model 423A Crystal Detectors used as a matched pair with an –hp– Model 692A 2-4 Gc Sweeper and an –hp– Model 777D Coaxial Dual Directional Coupler to form a swept reflectometer.*

© Copr. 1949-1998 Hewlett-Packard Co.