HEWLETT-PACKARD
JOURNAL
TECHNICAL INFORMATION FROM THE -hp- LABORATORIES
Vol. 13, No. 6
PUBLISHED BY THE HEWLETT-PACKARD COMPANY, 1501 PAGE MILL ROAD, PALO ALTO, CALIFORNIA
FEBRUARY, 1962

A New Digital Voltmeter Having High Rejection of Hum and Noise

HIGH accuracy in a digital voltmeter is of little practical value unless that accuracy can be maintained under the conditions of everyday use. In particular, if the voltmeter does not adequately discriminate against the unwanted signals that often accompany the desired signal in the situations in which digital voltmeters are frequently used, then serious errors can occur and high voltmeter accuracy is of little avail.

SEE ALSO:
Digital Recorder, p. 5
D-A Converter, p. 8

To permit the benefits of the digital type voltmeter to be obtained where unwanted hum is troublesome as well as in ordinary usage, a new digital dc voltmeter, designed and produced by *-hp-*'s Dymec Division, now provides virtual freedom from the errors caused by external common-mode signals. In this voltmeter a common-mode rejection of more than 140 db at all frequencies and 160 db at dc is obtained. Substantial rejection of single-ended or superimposed noise is also achieved. These characteristics are obtained through a new approach to digital voltmeter design—one in which the input and measuring circuitry is both floated and guarded and in which the measurement is made by an integrating technique rather than by techniques presently in use.

The new voltmeter has five-digit resolution and measures up to ±1000 volts dc in five ranges with 300% over-ranging on the four lower ranges. The most sensitive range is an advance for digital voltmeters in that it has a full-scale value of only 100 millivolts. This high sensitivity results in a digital voltmeter that is much more suited to measuring the millivolt-level signals that are encountered in work involving thermo-couple and strain-gage transducers, a common field of use for digital voltmeters. For example, measurements made

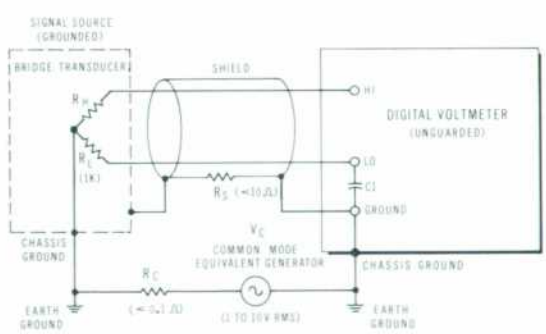

Fig. 1. *Equivalent circuit showing how unguarded voltmeter incurs errors from common-mode hum pickup. Current produced by hum pickup develops spurious input voltage across R_L, but hum voltage across R_H is negligible due to high impedance of voltmeter. Large value typical of C_1 (0.1 μf) limits common-mode rejection to about 29 db with R_L of 1K. Shield offers negligible improvement because of low value of R_C.*

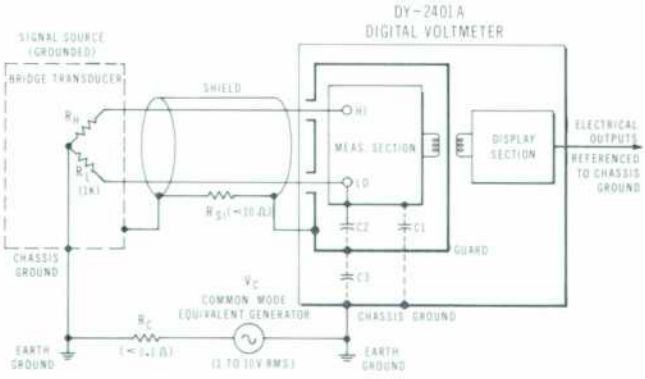

Fig. 2. *Guarded measurement technique of Dymec 2401A voltmeter acts to open ground loop to hum currents by reducing measuring-circuit-to-chassis capacitance C_1 to below 2.5 pf, giving common-mode rejection of 120 db at 60 cps. Effect of C_2, C_3 is negligible, while voltage across R_L is typically below 10^{-7} volt. Average-reading nature of 2401A further improves noise rejection.*

COPYRIGHT 1962 HEWLETT-PACKARD CO.

© Copr. 1949-1998 Hewlett-Packard Co.

Fig. 3. *Dymec 2401A Integrating Digital Voltmeter has floated and guarded input to achieve very high common-mode-noise rejection. Most sensitive range of voltmeter is 0.1 volt full scale with resolution of 10 microvolts. Over-ranging of 300% is provided.*

on the 100 mv range at a sampling period of only 0.1 second will have a resolution of 10 microvolts per digit. This is ten times more sensitive than has been available commercially. Three fixed sampling periods of 0.01, 0.1, and 1.0 second are provided to allow the optimum combination of speed and resolution.

The increased sensitivity and resolution of the voltmeter are accompanied by a commensurately-high accuracy. As regards accuracy, in fact, the overall performance of the instrument is fully specified as to stability, linearity, temperature effects, and calibrator performance. This information enables the instrument to be used with knowledge of the specific performance that will be obtained under given conditions. The performance established for the instrument is shown in the accompanying table, but in short it can be stated that the instrument is of the very high (0.01%) accuracy class.

To make the voltmeter convenient for system work, all of its operations have been made programmable by external contact closures, while all control lines and electrical outputs are referred to ground potential. Suitability of the instrument for systems use has been further enhanced by avoiding electromechanical devices in the measuring circuits, while in the program circuits (and in the instrument as a whole) only one type of such device is used. This is the reliable reed-type relay which programs the range attenuator. All circuitry in the instrument is transistorized except for four tubes used in the operational amplifier.

Electrical outputs representing the visual digital reading also have been made available for operating external digital recorders.

RESOLUTION AND RANGE VALUES OF DYMEC 2401A DIGITAL VOLTMETER

SAMPLE PERIOD	MEAS. SPEED	SELECTED RANGE (V)	FULL SCALE READING	RES	OVERRANGE READING (MAX)	RES
1 SECOND	1 READING/SEC	0.1	99.999 MV	1 PART IN 10^3	(3) 00.000 MV	3 PARTS IN 10^5
		1	999.99 MV		(3) 000.00 MV	
		10	9.9999 V		(3) 0.0000 V	
		100	99.999 V		(3) 00.000 V	
		1000	999.99 V		———	
0.1 SECOND	9 READINGS/SEC	0.1	100.00 MV	1 PART IN 10^4	300.00 MV	3 PARTS IN 10^5
		1	1.0000 V		3.0000 V	
		10	10.000 V		30.000 V	
		100	100.00 V		300.00 V	
		1000	1000.0 V		———	
0.01 SECOND	80 READINGS/SEC	0.1	0100.0 MV	1 PART IN 10^3	0300.0 MV	3 PARTS IN 10^4
		1	01.000 V		03.000 V	
		10	010.00 V		030.00 V	
		100	0100.0 V		0300.0 V	
		1000	01000. V		———	

NOTE: Polarity Sensed and Indicated Automatically

THE NOISE PROBLEM

Hum pickup and other noise on the measured signal can reduce the reliability of reading of digital voltmeters of the commonly-used successive approximation or ramp types. Since these types of circuits measure the input signal at a specific instant in time, they will be in error by the magnitude of any noise present at the instant of measurement. A third type of digital voltmeter, the continuous-balance type, is likely to "hunt" for, but never reach, an answer when noise signals are present at the time of measurement.

The most frequent source of noise is power line pickup or hum which results from having two grounds in the system—one at the signal source and the other at the voltmeter. This effect is known as common-mode pickup, because one end of the equivalent hum generator is common to both sides of the input signal pair. Common-mode pickup will cause a voltage to appear at the voltmeter input which can easily be as large as the signal itself, resulting in a completely erroneous reading. A voltmeter with a conventional floating input can reduce common-mode pickup to some extent, but it is limited in its effectiveness by the capacitance between the measuring circuit and the instrument chassis. Current injection from the voltmeter power supply is also a problem with this type of instrument. Use of a heavy ground bus or shield usually will not reduce common-mode pickup appreciably and may even increase it, due to magnetic pickup from the ground loop formed.

The new voltmeter, however, incorporates a shield or "guard" which completely isolates the floated measurement circuit from the main chassis. In effect, the guard breaks the common-mode loop. By operating the guard at the ac or dc po-

ACCURACY SPECIFICATIONS FOR DYMEC 2401A VOLTMETER

ACCURACY

(Specifications hold for ±10% line voltage change.)

Stability (at constant temp.):

± .01% of full scale per day, 1/10/100/1000v ranges.

± .03% of full scale per day, 0.1v range.

Internal ± 1v calibration source: ± .01% per month.

Linearity (referred to straight line through zero and full scale calibration points):

± .005% of full scale, zero to full scale.

Linearity decreases to ± .015% of reading at 200% of f.s. and to ± .025% of reading at 300% of f.s.

Temperature Effects (+10°C to +50°C)

Note: Temperature effects can be calibrated out before taking readings.

Scale factor:

± .002% of reading/°C, 0.1/1v ranges.

± .0027% of reading/°C, 10/100/1000v ranges.

Zero:

± .002% of full scale/°C, 0.1v range.

± .0008% of full scale/°C, 1/10/100/1000v ranges.

Internal Calibration Source:

± .002%/°C.

© Copr. 1949-1998 Hewlett-Packard Co.

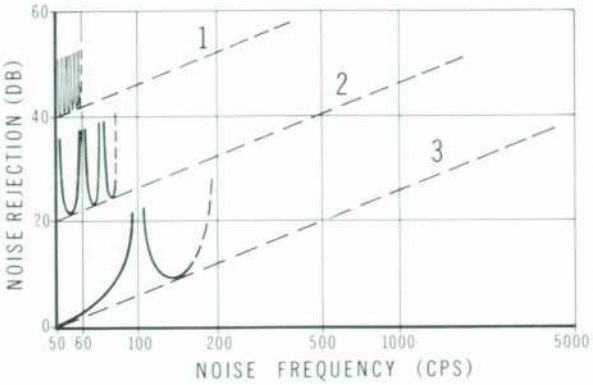

Fig. 4. *Rejection characteristics of Dymec 2401A voltmeter to noise applied to voltmeter terminals. Curves 1,2,3 are for 1, 0.1, and 0.01 sampling periods. Rejection characteristics have infinite-rejection cusps every 1, 10, and 100 cycles, as shown.*

tential at the source, the common-mode rejection (defined as the ratio between the common-mode signal and the voltage it causes to be superimposed on the source) exceeds 120 db at 60 cps and 160 db at dc. This performance applies for impedances as high as 1000 ohms between source ground and the low side of the voltmeter input.

Besides its advantages in hum rejection, use of the guard circuit also results in a voltmeter that can be used directly with grounded recording equipment without loss of the floated and guarded properties of the voltmeter input.

ADDITIONAL NOISE REJECTION

The effect of noise, common-mode or single-ended, which is unavoidably superimposed on the signal is minimized by another feature of the voltmeter. This is that the voltmeter is designed to make its measurements by means of an integrating process. The amount of rejection that this process achieves for noise is substantial, although it varies with the noise frequency and the amount of time used for integration or averaging. Assuming that the peak noise does not exceed the dc signal level, averaging results in at least 20 db rejection at 55 cps (0.1-second sample period) and, because the integral of a complete sine wave is zero, noise rejection is essentially infinite at 60 cps and other decade frequencies. The instrument's rejection of superimposed noise is shown in Fig. 4. For common-mode noise, the combined effect of guarding and averaging results in a rejection of more than 140 db at all frequencies. This can be demonstrated in a graphic way by noting that 100 volts of common-mode pickup causes less than 10 microvolts change in reading.

INTEGRATING-TYPE MEASUREMENT PROCESS

The basic circuit arrangement of the voltmeter is indicated in Fig. 5. The dc voltage to be measured causes section A to generate a train of pulses whose repetition rate is made to be directly proportional to the input voltage. Section B then counts the number of these pulses occurring during a preselected time interval to obtain the time integral of the input voltage.

Section A consists of an analog integrator which is provided with two special feedback circuits. When a dc voltage to be measured is applied to the integrator, the integrator output voltage rises at a slope and polarity that depend on the magnitude and polarity of the voltage to be measured.

The integrator output is connected to two pulse-generating channels, one triggered by a negative-going voltage, the other by a positive-going voltage. When the integrator output reaches a predetermined level, it triggers the appropriate pulse generator and a pulse of proper polarity is supplied to the integrator input to cancel the integrated voltage and return the integrator output to its zero condition. As long as the external dc voltage is applied to the voltmeter, the process repeats itself. The total integral of the input voltage over any given time interval is thus equal to the integral of the feedback pulses over that same time interval. Since the feedback pulses are of constant voltage-time area, their integral and hence that of the input voltage is given by a count of the pulses.

The function of the counter in Section B is now to totalize the pulses over a precise time interval. By making the pulse repetition rate of Section A an integral decimal multiple of the input voltage (i.e., 100,000 pps for 1 volt input) and totalizing over an integral decimal

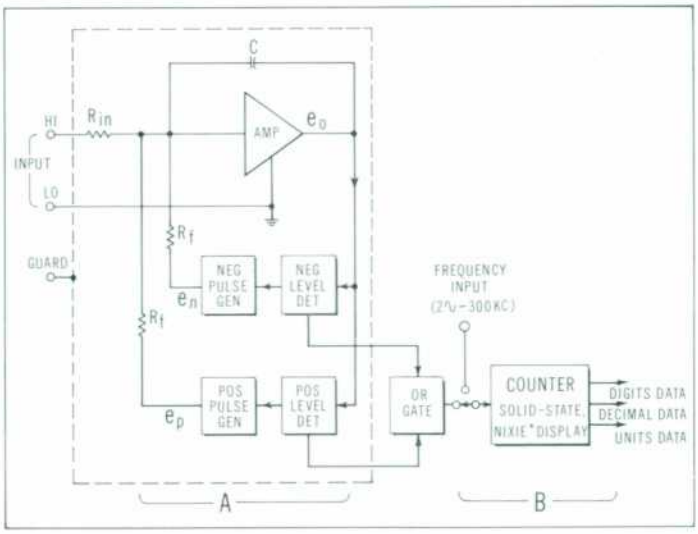

Fig. 5. *Circuit arrangement of Dymec 2401A Voltmeter.*

© Copr. 1949-1998 Hewlett-Packard Co.

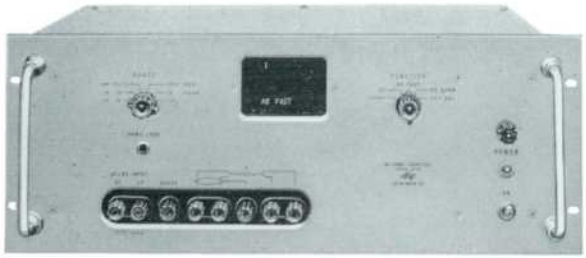

Fig. 6. *Dymec 2410A AC/Ohms Converter is designed to be used with Dymec Digital Voltmeter to measure ac voltages and resistances.*

multiple of 1 second, the counter registration needs only correct positioning of the decimal point to display a direct reading of the input voltage.

The voltmeter display consists of a 5-digit Nixie® readout with indication of decimal point, measurement units (e.g., volts or mv) and polarity. Polarity information is obtained by sensing the active pulse generator. Binary-coded-decimal recording outputs are provided for the displayed reading, range, measurement units and polarity.

To prevent circulating ground currents from passing through the signal source, as is possible in the circuit shown in Fig. 1, the guard circuit previously mentioned encloses the analog-measuring portion of the voltmeter circuit. The shielding is extensive and is designed so that power frequency currents from the internal power supply are not fed back to the measured source where they would appear as superimposed hum signals. The two pulse trains leave the guarded area through small shielded pulse transformers. Outside the shield, all circuitry functions with respect to chassis ground, permitting all output and control lines to be referenced to chassis ground with no effect on the floating or guarding.

INTERNAL CALIBRATOR

The voltmeter also includes a ± 1-volt calibrator which has a stability of within ± 0.01% per month. The calibration procedure can be carried out from the instrument's front panel. The calibrator is capable of being adjusted within ± 0.001% when compared with a suitable external standard.

DIGITAL RECORDING

The voltmeter is arranged so that it can directly drive the -hp- Model 562A Digital Recorder to make automatic printed records of voltage measurements on paper tape. A number of other devices such as card punches, comparators, tape punches and other parallel- and serial-entry devices can be operated using auxiliary Dymec equipment.

FREQUENCY COUNTING

Since part of the voltmeter circuit is in fact a frequency counter, this part has been made available for external use. This permits the instrument to be used to count frequencies up to 300 kc with gate times of 0.01, 0.1, or 1 second, or manually or remotely controlled. Gates times are crystal-controlled to an accuracy of approximately 0.01%.

AC/OHMS MEASUREMENTS

The new voltmeter can also be used to measure ac voltages to 750 volts peak and resistances to 10 megohms in conjunction with the Dymec 2410A AC/Ohms Converter shown in Fig. 6. When the two instruments are used together, the readout including the units of measurement is given on the voltmeter. Units are also indicated on the Converter. Measurements with the Converter are made with a floated and guarded circuit, and are fully programmable.

ACKNOWLEDGMENT

The Dy-2410A design group at Dymec included R. M. Cook, Project Engineer, R. Y. Moss, who performed counter and logic development, and R. E. Cooley, who performed development of the converter section.

—R. A. Andersen

BRIEF SPECIFICATIONS
DYMEC 2401A
INTEGRATING DIGITAL VOLTMETER

—DC VOLTAGE MEASUREMENTS—

INPUT
Ranges: 5 ranges from 0.1v to 1000v full scale. Selection by front panel switch or remote contact closure to ground. Polarity sensed automatically.
Overranging: Overranging to 300% of full scale permissible, except on 1000v range. Attenuator switches automatically (in 3 ms) to 1000v range if overload exceeds 310%, and is held there until reset by front panel pushbutton or remote contact closure to ground.
Type: Floated and guarded signal pair. Signal pair and guard may be operated up to 500v above chassis ground.
Input Impedance: 1M on 1v and higher ranges 100K on 0.1v range.

NOISE REJECTION
Overall Common-Mode Rejection: Better than 140 db at all frequencies, 160 db at dc.

ACCURACY
(See text)

INTERNAL CALIBRATION SOURCE
± 1 volt internal standard provided for self-calibration. Voltage reference is derived from specially aged, temperature stabilized zener diode selected for drift of less than 0.01% per month (see Accuracy specifications above). May be compared with external standard and adjusted to within ± .001%.

TRANSIENT RESPONSE
Response is instantaneous except for small loss of 2 digits if signal reverses polarity.

—FREQUENCY MEASUREMENTS—

Range: 10 cps to 300 kc.
Gate Time: 0.01, 0.1, 1.0 second or manual control (front panel switch or remote signal).
Accuracy: ± 1 count ± time base accuracy.
Internal Time Base: ± 0.01% stability, long term. (Self-check control on front panel.)
Input Sensitivity: 0.1 to 100v rms (front panel sensitivity adjustment), or will accept 1v negative pulses, 2 μs min. width.
Impedance: 1M shunted by 100 pf.

—GENERAL SPECIFICATIONS—

DISPLAY
5-digit Nixie® readout. Polarity, decimal point, measurement units and overload condition indicated automatically.

RECORDING OUTPUTS
Measurement units, function, numerical data and range represented by binary-coded decimal output signals, suitable for operating -hp- 562A Digital Recorder or other external devices, directly or via a Dymec coupler.

FREQUENCY OUTPUT
Internal 100 kc frequency standard is available at rear BNC.

PULSE TRAIN OUTPUTS
Three outputs are provided at individual rear BNC connectors.

EXTERNAL PROGRAMMING
DY-2401A may be completely programmed by external contact closures to ground.

OPERATING CONDITIONS
Specifications apply for ambient operating temperature up to +50° C; relative humidity up to 95% at 40° C.

POWER REQUIRED
115/230v ± 10%, 50/60 cps, 150 watts approx.

WEIGHT
Net weight 48 lbs.; shipping weight 70 lbs. approx.

PRICE
Model DY-2401A Integrating Digital Voltmeter, $3,950.00.
All prices f.o.b. Palo Alto, Calif.
Data subject to change without notice.

DYMEC
A division of Hewlett-Packard Co.
395 Page Mill Road
Palo Alto, Calif.

© Copr. 1949-1998 Hewlett-Packard Co.

A VERSATILE DIGITAL RECORDER FOR BCD DATA

Fig. 1. *New -hp- Model 562A Digital Recorder (center) operates from BCD codes to print digital data such as from counters on paper tape. Unit also has option of analog output to drive strip recorders.*

SEVERAL years ago -hp- introduced two digital recorders which printed digital data from -hp- counters and other digital equipment on paper tape at high speed. These recorders, one of whose first uses was to record valuable frequency information from Sputnik I[1], could print up to 12 digits per line at speeds up to 5 lines per second for a total capacity of 3600 digits per minute. The recorders operated from electrical signals in the form of staircase[2] and ten-line[3] codes.

A new recorder has now been developed which operates primarily from the familiar four-line Binary Coded Decimal system. The new recorder is a companion to its forerunners and has the same characteristics with regard to speed, print capacity, and reliability. In addition, though, the new unit can also be directly operated from transistorized as well as vacuum-tube equipment. The recorder can be used with counters, translators, computers, and many other digital systems.

[1] "Sputnik's Doppler Shift Measured and Recorded with -hp- Counter and Digital Recorder," Hewlett-Packard Journal, Suppl. to Vol. 9, No. 1-2, Sept.-Oct., 1957.

[2] Alan S. Bagley and Ed. A. Hilton, "A Fast Digital Recorder with Analog Output for Automatic Data Plotting," Hewlett-Packard Journal, Vol. 8, No. 7, March, 1957.

[3] Ed. A. Hilton, "A Fast, Automatic Printer for Digital Type Data Devices," Hewlett-Packard Journal, Vol. 9, No. 9, May, 1958.

The recorder itself is also fully transistorized. Additional features include electronic data storage and the ability to be arranged for dual input coupling. High accuracy analog records may be made with potentiometer or galvanometer type recorders by means of an optional analog output feature that is completely independent of the print mechanism.

Printing is accomplished with a mechanism similar to that of the -hp- 560A and 561B Digital Recorders by striking a print bar against pre-positioned print wheels. Each print wheel represents an input column and has associated with it a printed circuit module containing circuitry for data storage and selection of the proper print character. For use with digital frequency- and time-measuring instruments, the printed circuit modules are arranged for a 1-2-2-4 BCD code with the "1" state positive with respect to the "0" state. Modules for other codes and codes of the opposite polarity are available. Since each print wheel operates with its own module, different input codes may be used for separate wheels. Furthermore, internal connectors are provided for routing input data to any of the column modules. The connectors are readily accessible so that any desired printing format can be quickly established.

FLEXIBLE INPUT

One of the most useful features of the new 562A Digital Recorder is the wide range of input conditions it can accept. Input voltage swings (between "0" and "1" states) may be as small as 4 volts or as large as 75 volts. Two reference voltages es-

Fig. 2. *New -hp- Model 562A Digital Recorder prints up to 3600 digits per minute on paper tape. Optional analog circuitry occupies left portion of panel.*

tablish the dc level of these input swings as far as the recorder input is concerned. The dc level of the BCD input can have peak values anywhere within a total range of ±150 volts with respect to chassis ground. Fig. 3 illustrates this.

By deriving the reference voltages for the input data from the driving equipment, compatibility with many types of equipment is assured regardless of wide differences in output levels and swing amplitudes. Further, this arrangement greatly aids reliable data transfer from source to recorder since any change in environment or other conditions which might cause a change in code amplitudes would have a similar effect on the reference voltages. So long as the reference voltages are separated by a voltage approximately equal to the code swing amplitude, data will be properly entered to the recorder.

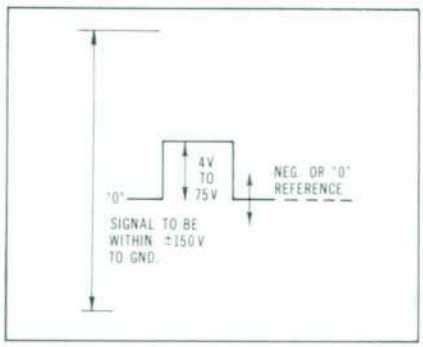

Fig. 3. *Diagram illustrating range of input voltage levels from which Recorder can operate.*

© Copr. 1949-1998 Hewlett-Packard Co.

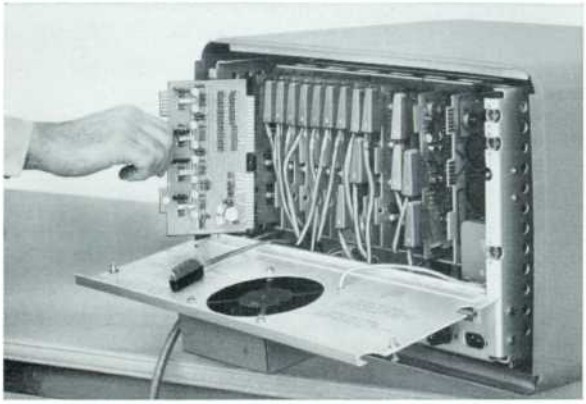

Fig. 4. *Circuitry for each printing column is located on separate plug-in circuit board. Various input codes and column arrangements are thus possible.*

The input impedance for this recorder is exceptionally high. This permits direct recovery of data from electronic equipment without the need for buffer elements. Driving requirements are as little as 15 μa into an input impedance of approximately 270K.

INPUT CODE

For use with -hp- and Dymec equipment, the new recorder is provided to accept a 1-2-2-4 BCD code with the "1" state positive with respect to the "0" state. For other applications, different codes may be obtained as required. In addition to the above, column modules can be furnished for 1-2-2-4 BCD code of the opposite polarity, that is, with the change from binary "0" to binary "1" represented by negative-going voltage. Also available as standard options will be column boards for 1-2-4-8 weighted BCD codes of either polarity. The specifications applying to input voltage swings, reference levels, input impedances and storage apply to all of these boards. Other four-line codes are available on special request. Column modules may also be obtained for recording directly from ten-line data.

Because each printed column has its own associated circuit modules, it is possible to intermix input codes within one printer, provided only that no more than two different sets of reference voltages are required. This is particularly useful where it is necessary to print from two data sources simultaneously (dual input coupling). Differences in code weighting, polarity, input swings and reference levels can be readily accommodated.

DATA STORAGE

Four-line data presented to the recorder is entered into flip-flops which store the information to be printed until the character wheels are properly positioned. This arrangement eliminates the need to inhibit the driving source during the mechanical scan cycle. Once data is transferred to the recorder flip-flops, the input equipment can be released to gather new data. This will often increase the total amount of information that can be recorded in a given time. For system applications, the feature of input storage will often permit simplification of the control logic associated with data sampling and transfer.

Fig. 5 shows the block diagram for data storage, translation, and print wheel positioning for a 1-2-2-4 binary decimal code. With no input BCD voltages applied, the storage flip-flops will assume the condition required to position the print wheels to blank. With input supplied, the storage transfer will be to the states dictated by the input data.

PRINTING FROM TWO SOURCES

At small additional cost, the recorder can be provided with the input cabling needed for dual input recording. In order to record from two sources, on a synchronized basis, the digital recorder must receive two print commands, one from each source. When the first print command is received, it is stored and an inhibit signal is applied to the instrument furnishing the print command. When the second print command is received, the print cycle begins. Both driving instruments are held off until the data storage cycle is complete, at which time both driving instruments are released. With this type of operation, the overall system is kept in synchronization, even though sampling

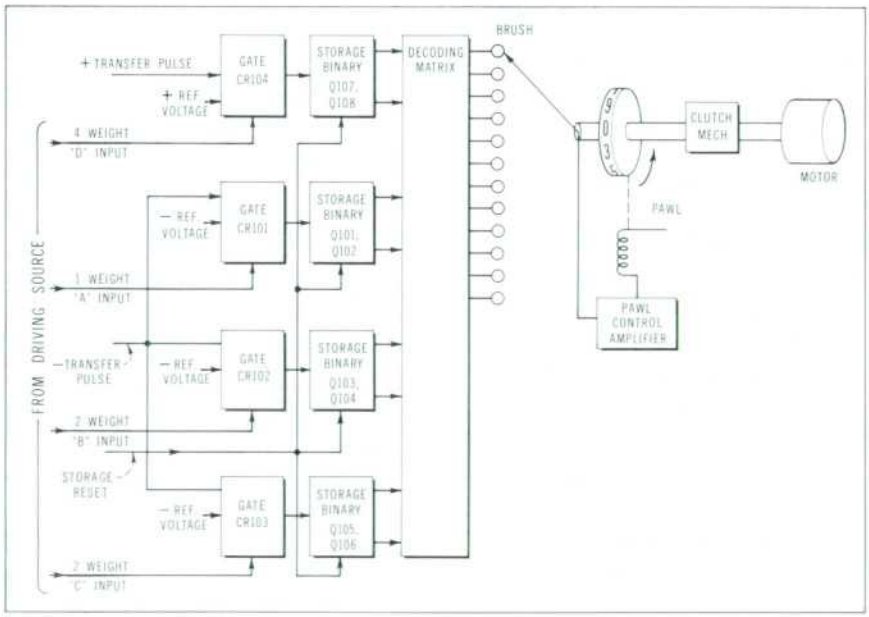

Fig. 5. *Basic circuit arrangement of -hp- 562A Digital Recorder.*

© Copr. 1949-1998 Hewlett-Packard Co.

rates for the two driving instruments are determined independently. In this way, data can be printed simultaneously from two completely independent instruments, such as a counter and a digital voltmeter, or two counters with different gate times.

ANALOG OUTPUT

An analog output proportional to certain selected columns of data can add greatly to the usefulness and flexibility of a digital recorder. The new Model 562A accomplishes this by making use of the function of input storage to derive a high accuracy analog suitable for strip chart and X-Y recorders of either the potentiometer or galvanometer type.

The analog panel for this optional feature is shown in the photograph of Fig. 2. A switching arrangement permits the operator to select the consecutive columns of input data to be recorded in analog form. Any 3 of the first 9 columns may be used as well as the right hand 2. The wide range zero and calibrate controls also on the analog panel make it possible to adapt the output to many different recorders and recording setups.

The analog conversion is derived from the recorder's storage flip-flops and has the advantage of freeing the analog from dependence on the mechanism. Where only analog records are desired, the printing mechanism can be disabled. This eliminates unnecessary use of the mechanism and permits data sampling rates far greater than the digital recorder's maximum print rate.

The basic electronic circuitry used to develop the analog output from the 562A has been incorporated in a separate instrument, the Model 580A Digital-to-Analog Converter. The performance characteristics and features of this instrument are treated in some detail in the article that follows. Functionally, the 580A is identical with the analog option of the 562A.

ACKNOWLEDGMENT

The design group for the Digital Recorder included the undersigned as group leader, Ronald C. Jensen who performed on the circuit design and Frank R. Berry who performed the mechanical design.

—Ed. A. Hilton

SPECIFICATIONS
-hp-
MODEL 562A
DIGITAL RECORDER

Accuracy: Identical to input device used.
Printing Rate: 5 lines per second, maximum.
Column Capacity: To 11 columns (12 available on special order).
Print Wheels: 12 positions, numerals 0 through 9, a minus sign, and a blank. Other symbols available.
Input Requirements:
Data Input: Parallel entry 1224 BCD "1" state +4 volts to +75 volts with respect to "0" state. Other codes and polarities available.
Reference Voltages: Reference voltages required for both the "0" and "1" state. Reference voltages not to exceed ±150 volts to chassis. Input impedance approximately 270 K ohms.
Hold-off Signals: Both polarities are available simultaneously and are diode coupled; 10 ma maximum load. +15 v open circuit from 1K source —5 v open circuit from 2.2K source.
Print Command: + or — pulse, 6 to 40 volts amplitude 20 μs or greater in width, ac coupled.
Analog Output (Option 4-1): (From 1224 "1" state positive boards only.) Accuracy is ± 0.5% of full scale or better. 100 mv for potentiometer recorder; 0.5 megohm minimum load resistance. 1 ma into 5000 ohms maximum for galvanometer recorder.
Transfer Time: 2 ms.
Paper Required: -hp- folded paper tape (15,000 prints per packet with single spacing), or standard 3-inch roll tape.
Line Spacing: Zero, single or double. In "zero," does not print, paper does not advance.
Power Requirements: 115 or 230 volts ±10%, 50 to 60 cps, approximately 130 watts. (4 prints per sec maximum at 50 cps; 50 cps model with 5 prints per second available.)
Dimensions:
Cabinet Mount: 20¾ in. wide, 12½ in. high, 18½ in. deep.
Rack Mount: 19 in. wide, 10½ in. high, 16½ in. deep.
Weight:
Cabinet Mount: Net 35 lbs. Shipping approx. 70 lbs.
Rack Mount: Net 30 lbs. Shipping approx. 63 lbs.
Price: Basic instrument with 11-column capacity; includes one BCD Input Cable and one BCD Input Connector Assembly for up to nine column boards. Column boards, required for operation, are not included. -hp- Model 562A Digital Recorder (cabinet, basic unit), $1175.00. -hp- Model 562AR Digital Recorder (rack, basic unit), $1150.00.

NOTE: The Model 562A Recorder is available with several standard options as to number of columns provided, coding polarities, etc. Details on request.

Prices f.o.b. factory.
Data subject to change without notice.

HEWLETT-PACKARD COMPANY
1501 Page Mill Road
Palo Alto, Calif.

(continued from p. 8)

Fig. 3. *-hp- Model 580A Digital-to-Analog Converter.*

amp into 5000 ohms is available. Sample rates of 50 per second or higher are possible using this output. This is particularly useful for recording from high speed digital systems.

INPUT REQUIREMENTS

The Model 580A is arranged in its standard configuration to work with any of the new -hp- counters, and with all -hp- and DY equipment with 4-line output kits. All of these counters are equipped with 4-line BCD output in a 1-2-2-4 weighted code. Output kits are available for other -hp- and Dymec counters and digital voltmeters that do not include a 4-line output as a standard feature. The 562A can also use the same 4-line kit.

The wide range of input voltages possible makes the 580A suitable for use in many applications. The input swing on the 4-line 1-2-2-4 code may be anywhere from 4 to 75 volts. As with the 562A, reference voltages are required. They establish the "0" and "1" state levels and may be anywhere within a range of + or —150 volts with respect to chassis.

ACKNOWLEDGMENT

In addition to the undersigned, the design for the digital-to-analog converter was performed by Ronald C. Jensen, with assistance in the production aspects from Patrick A. Bohn.

—Ed. A. Hilton

SPECIFICATIONS
-hp-
MODEL 580A
DIGITAL-TO-ANALOG CONVERTER

Accuracy: 0.5% of full scale or better.
Potentiometer Output: 100 mv full scale. Minimum load resistance: 47 kilohm. Calibrate control.
Galvanometer Output: 0 to 1 ma into 5,000 ohms or less. Zero and calibrate controls.
Input Requirements:
Data Input: Parallel entry 1-2-2-4 BCD. "1" state +4 volts to +75 volts with respect to "0" state.
Reference Voltages: Reference voltages required for both the "0" and "1" state. Reference voltages not to exceed ±150 volts to chassis. Input impedance approx. 270 kilohms.
Command Pulse: Positive or negative pulse, 20 μsec or greater in width, 6 to 20 volts amplitude.
Transfer Time: 1 millisecond.
Power: 115/230 volts, 50/1000 cps.
Dimensions: 16¾ in. wide, 3½ in. high, 11½ in. deep.
Price: Model 580A: $525.00.

All prices f.o.b. factory.
Data subject to change without notice.

© Copr. 1949-1998 Hewlett-Packard Co.

A DIGITAL-TO-ANALOG CONVERTER WITH HIGH OUTPUT RESOLUTION

Fig. 1. *New -hp- Model 580A D-A Converter (lower center) enables digital data such as frequency counter readings to be recorded on either galvanometer or potentiometer type recorders.*

For many data recording applications, digital-to-analog conversion offers important advantages. Strip chart records of continuously changing data, for example, are more readily analyzed for trends and other change characteristics than printed digital data. Examples include such applications as telemetry, fuel flow measurements, frequency deviation measurements, and oscillator stability and inter-comparison tests.

In addition, because changes in data can be handled at a faster rate with analog recorders than with digital recorders, digital-to-analog converters find important use where high density plots of changing data are required. The use of an analog recorder substantially compresses the data over that possible with printed-tape digital records. Furthermore, for measurements made under conditions of noise, the analog plot is useful for graphical averaging to determine incremental changes and line slopes.

Fig. 1 shows a typical setup for oscillator stability measurements. One of the new -hp- counters is used in conjunction with the Model 580A Digital-to-Analog Converter to make a direct plot of the counter readings. For this test, the 3 least significant digits have been selected for analog conversion. Since the frequency being measured is in the vicinity of 3 kc, a full scale change on the strip chart record amounts to a 3% change in the actual output frequency. The resolution chosen for the analog record in any measurement application will of course depend on the magnitude of the expected change. If the least significant two digits had been selected for this measurement, full scale resolution would be 0.3% of the oscillator output frequency.

With this recording arrangement, the stability behavior of the oscillator during the period of test may be readily determined. Both the magnitude and the character of the changes that occur are clearly presented. Furthermore, there is no loss of measurement accuracy since only the least significant digits are selected for analog conversion. To derive the same information from a long strip of printed digital data would be time-consuming and laborious.

DIGITAL-TO-ANALOG CONVERSION

As with the analog option of the 562A, Model 580A derives an analog voltage by making use of BCD data stored in input flip-flops. A switching arrangement connects any 3 consecutive columns (or the right hand 2) of the input data to these storage devices. A total of 9 input columns may be accommodated from the driving source.

For 4-line BCD input codes, the storage decade for each digital column consists of 4 transistor flip-flops. Analog conversion is accomplished by first weighting the outputs from each of these flip-flops according to the code of the data presented by the driving source. In the block diagram of Fig. 2, the code is 1-2-2-4 and weighting resistors have values in this ratio.

Each of the 3 storage decades then produces a staircase function with a level proportional to the numerical value of its stored BCD data. These staircases are in turn mixed in the ratio of 1, 10 and 100 according to their decade value to produce a single staircase function with a 1000 steps from zero to full scale. Each discrete step then represents 0.1% of full scale and for practical purposes is an analog function.

This output voltage is then attenuated and provides an output for potentiometer type recorders. It is also applied to an amplifier whose output can be used to drive a 1 milliamp type galvanometer recorder.

For maximum stability over a wide range of operating conditions, Model 580A incorporates a zener referenced power supply for independence from line voltage changes, diode clamps to insure accurate voltage levels before mixing, and compensation elements to maintain constant output over wide temperature extremes.

Because the source data is electronically stored and almost continuously presented to the clamping and conversion networks, the analog outputs developed have good accuracy and resolution even with large, frequent changes in input data. Accuracies better than 0.5% of full scale may be obtained.

POTENTIOMETER OUTPUT

The potentiometer output is capable of delivering a voltage of up to 100 millivolts into a minimum load resistance of 47K ohms. Data sampling rates of over 10 lines per second may be handled with full specified accuracy and resolution. At higher sampling rates, the output filter that is used to prevent ringing in transformer input recorders limits the response of the 580A.

GALVANOMETER OUTPUT

The analog voltage developed in the mixing networks is applied also to an amplifier to provide a current source suitable for driving galvanometer-strip chart or X-Y recorders. Zero to 1 milli-

(concluded on p. 7)

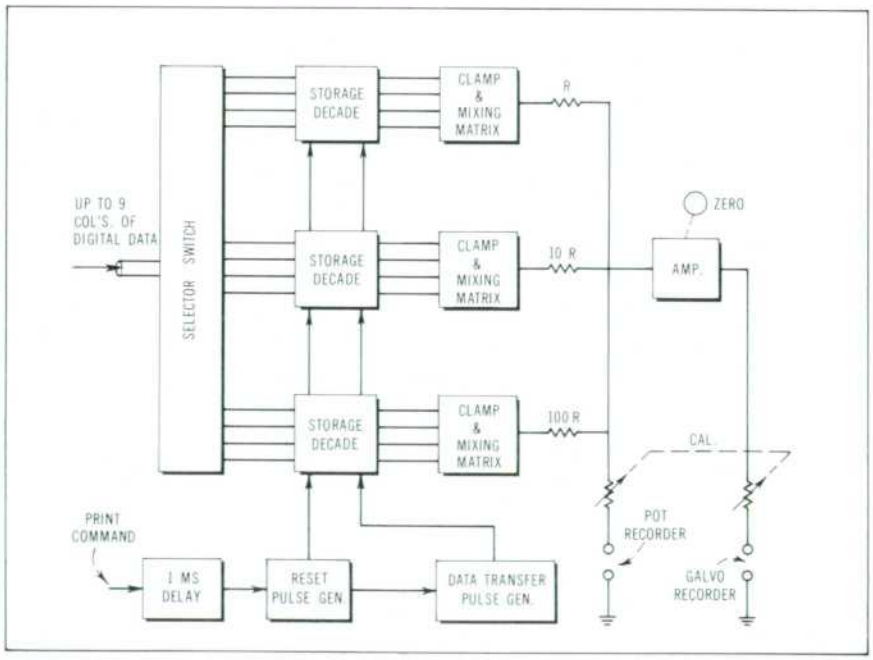

Fig. 2. *Circuit layout of -hp- Model 580A Digital-to-Analog Converter.*

© Copr. 1949-1998 Hewlett-Packard Co.